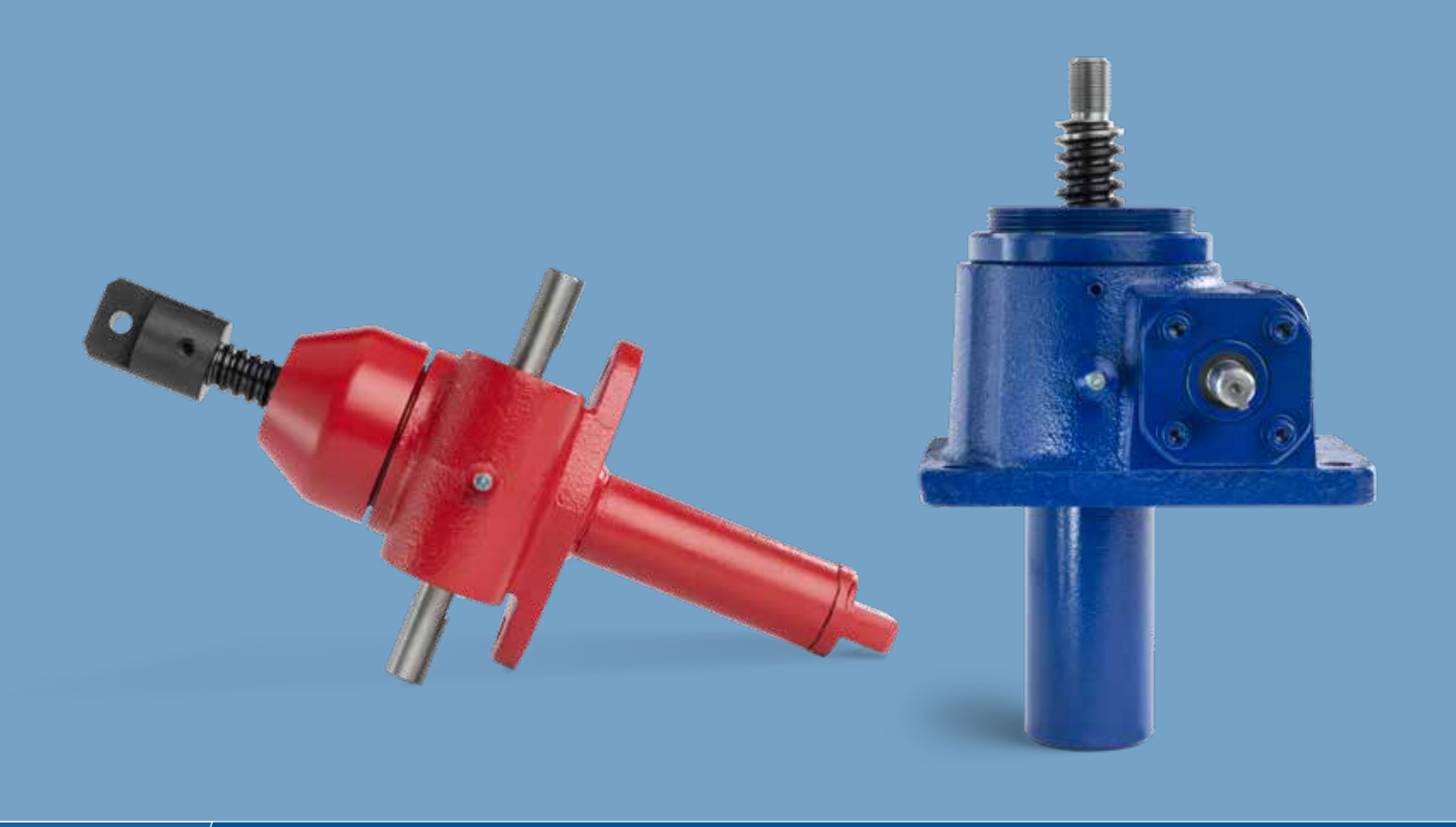

ActionJac™ Screw Jacks

Reliable, High-Quality Screw Jacks for Demanding Applications in Harsh Environments

NOOK™
A REGAL REXNORD BRAND

THOMSON®
Linear Motion. **Optimized.**™
A REGAL REXNORD BRAND

www.thomsonlinear.com

Nook/Thomson - the Choice for Optimized Motion Solution

Often the ideal design solution is not about finding the fastest, sturdiest, most accurate or even the least expensive option. Rather, the ideal solution is the optimal balance of performance, life and cost.

Quickly Configure the Optimal Linear Motion Solutions

Nook/Thomson has several advantages that makes us the supplier of choice for linear motion technology.

- Nook/Thomson owns the broadest standard product offering of mechanical motion technologies in the industry.
- Modified versions of standard product or white sheet design solutions are routine for us.
- Choose Nook/Thomson and gain access to more than 75 years of global application experience in industries including packaging, factory automation, material handling, medical, clean energy, printing, automotive, machine tool, aerospace and defense.
- As part of Regal Rexnord Corporation, we are financially strong and unique in our ability to bring together control, drive, motor, power transmission and precision linear motion technologies.

A Name You Can Trust

A wealth of product and application information as well as 3D models, software tools, our distributor locator and global contact information is available at www.thomsonlinear.com/contact. Talk to us early in the design process to see how Nook/Thomson can help identify the optimal balance of performance, life and cost for your next application. And, call us or any of our 2000+ distribution partners around the world for fast delivery of replacement parts.

Local Support Around the Globe

Table of Contents

Nook/Thomson - a Reliable Partner 4

ActionJac Screw Jacks 6

Applications 10

Ball Screw Jacks 12

Machine Screw Jacks 48

Stainless Steel Jacks 82

Accessories 94

Technical Information 128

Multi-Screw-Jack Application Examples 132

Installation and Maintenance 136

Customer Support 138

Unit Conversion Chart 139

Nook/Thomson - a Reliable Partner

Our experience from working with stringent customer requirements in aerospace, medical, energy and military applications provides the background to be a reliable partner. Design and process verification and validation tools are employed throughout the product life cycle to ensure excellent performance, high quality and a long reliable life.

When you select a Nook/Thomson ActionJac™ screw jack system, you can be assured that it has been designed, manufactured and tested to the highest quality standards. ISO 9001 certification, top-of-the-line manufacturing and testing equipment, in combination with a relentless pursuit of quality work, ensures that Nook/Thomson always delivers an optimized solution.

Quality in Focus

Nook/Thomson is ISO-9001certified and also has a long history of working with quality system requirements from customers in the aerospace, automotive, medical and military markets, ensuring that the design and process validation tools these markets require are employed throughout the whole product life cycle.

The Nook/Thomson Cleveland facility is home to a state-of-the-art laboratory in which many advanced measurement tools are used to ensure ActionJac screw jacks meet the highest quality standards.

Nook/Thomson - a Reliable Partner

Testing and Verification

Nook/Thomson testing processes ensure that function, life, durability and performance are within the set specifications and are in compliance with relevant laws and regulations. Nook/Thomson also offers proof testing for customers developing new systems and actuators to help them get the products to market faster.

Customization

In-house manufacturing and an experienced team of design engineers allow Nook/Thomson to provide customized screw jacks for a wide variety of applications. Contact Nook/Thomson engineering for any special requirements or modifications.

ActionJac™ Screw Jacks

ActionJac screw jacks come in a wide variety of models with a large range of loads and speeds, ensuring that the right screw jack is put to the job no matter the application.

ActionJac housings are made of ductile iron or aluminum depending on the load rating. Each worm gear screw jack incorporates an alloy steel worm, which drives a high strength bronze worm gear (drive sleeve). The worm shaft is supported on anti-friction tapered roller bearings with external seals provided to prevent loss of lubrication. The drive sleeve is supported on anti-friction tapered roller or ball thrust bearings.

Ball Screw Jacks

ActionJac ball screw jacks use a ball screw and nut made from hardened alloy steel with hardened bearing balls carrying the load between nut and screw. This rolling action reduces friction between the nut and the screw, permitting smooth and efficient movement. Because of the greater efficiency and rolling action, the ball screw can operate at higher speeds or increased duty cycle when compared with the machine screw jack. The addition of a high-efficiency ball screw and nut reduces the required input torque to approximately one-third the torque required for the machine screw jack.

Machine Screw Jacks

ActionJac machine screw jacks incorporate the use of an acme screw with a thread form of 2C. With the use of gear ratios of 20:1 or greater, the jacks can be considered to be self locking. Because the drive sleeve includes the acme thread form, it is possible to have an anti-backlash option.

Stainless Steel Screw Jacks

ActionJac stainless steel machine screw jacks are ideal for use in demanding environments where corrosion resistance is required. All external components are manufactured from 300 Series stainless steel materials. These jacks use a stainless steel worm with a high-strength bronze drive sleeve. Load capacities for stainless steel machine screw jacks range from 0.66 to 6.666 tons. For increased capacity, a 17-4PH hardened worm is available.

Ball screw jack

Machine screw jack

Stainless steel screw jack

ActionJac Screw Jacks

Translating Jacks

A translating screw jack has a lift shaft, to which the load is attached, that moves through the gear box. A translating jack therefore has a variable total length.

Rotating Jacks

A rotating screw jack has a lift shaft that moves a nut to which the load is attached. A rotating jack therefore has a fixed total length.

Upright translating ball screw jack

Upright translating machine screw jack

Upright rotating ball screw jack

Upright rotating machine screw jack

Inverted translating ball screw jack

Inverted translating machine screw jack

Inverted rotating ball screw jack

Inverted rotating machine screw jack

ActionJac™ Screw Jacks

Double Clevis Jacks

Double clevis jacks are used when it is necessary to move a load through an arc, such as tracking antennas, hinged doors or air dampers. Machine screw and ball screw jacks from 1 to 15 ton capacities can be supplied with double clevis mounts. Double clevis designs are available with optional accessories such as boots, motor mounts, right-angle reducers, motors, encoders and rotary limit switches. To check column strength limitations for each application, use the extended pin-to-pin dimension and the column strength chart on pages 18 and 54.

Note: Mounting hardware for double clevis jacks should be specified as heat treated alloy steel clevis pins with at least 100,000 psi ultimate tensile strength. Double clevis jacks used horizontally will have reduced column strength and life. For most horizontal applications, Thomson recommends the use of an electric cylinder.

Double clevis ball screw jack

Double clevis machine screw jack

Keyed Screw Jacks

The lift shaft of a translating style jack must be attached to something or else the lift shaft will rotate instead of moving linearly. A feature can be added to a machine screw jack to prevent lift shaft rotation. This type of jack is referred to as a "keyed jack" and has built-in keyway, which will eliminate lift shaft rotation. A keyed machine screw jack will have a somewhat reduced life. Ball screw jacks can also be supplied with a device that prevents rotation of the lift shaft. Anti-rotation in this case is accomplished by a square guide attached to the screw translating inside a square stem cover attached to the jack. The square stem tube is supplied with lube fittings.

Upright keyed ball screw jack

Upright keyed machine screw jack

Inverted keyed ball screw jack

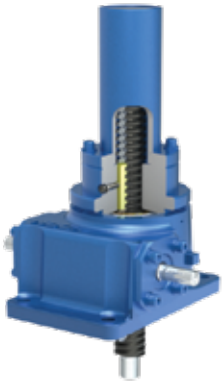

Inverted keyed machine screw jack

ActionJac Screw Jacks

Anti-Backlash Machine Screw Jacks

Anti-backlash jacks are used wherever reversible load conditions require precision positioning control. Adjustable backlash machine screw jack models are available to reduce backlash to approximately 0.003 in. An anti-backlash machine screw jack has an upper and a lower drive sleeve where the distance between them can be adjusted. This change in distance compensates for any lash. Because the drive sleeve is split, the life of an anti-backlash machine screw jack will be less. Anti-backlash machine screw jacks minimize backlash, but should not be used to completely eliminate backlash as the result would be a lock-up of lift shaft and drive sleeve.

Anti-Backlash Ball Screw Jacks

Ball screw jacks can be factory adjusted to reduce backlash by selecting bearing ball size in the ball nut to achieve a lash between the ball nut and ball screw of 0.003 - 0.005 in. Precision ball screws with preloaded ball nuts can be supplied to achieve zero lift shaft backlash.

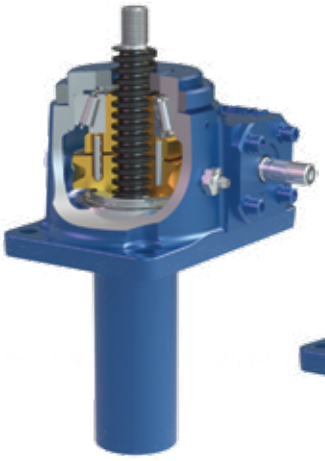

Upright anti-backlash machine screw jack

Inverted anti-backlash machine screw jack

Applications

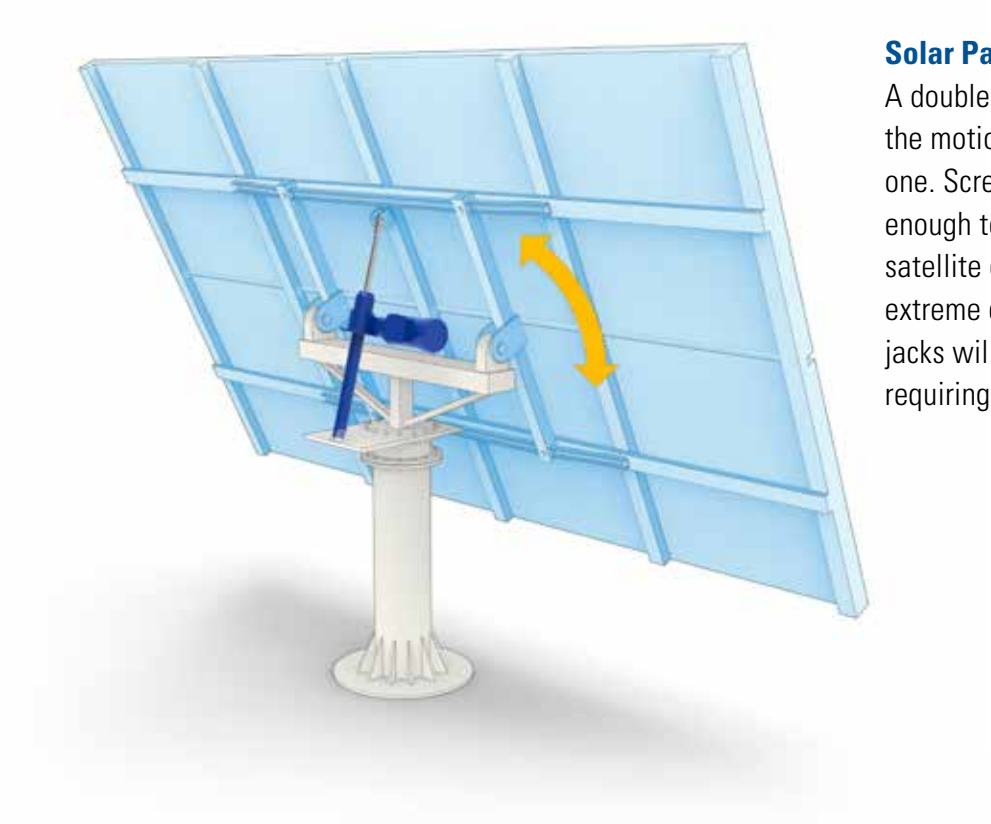

Solar Panels

A double clevis machine screw jack supports the motion for solar panels such as this one. Screw jacks are sturdy and strong enough to manipulate large solar panels, satellite dishes and wind turbines even in extreme conditions and temperatures. Screw jacks will work relentlessly all year round requiring a minimum of maintenace.

Automated Guided Vehicles

Screw jacks can be used to move and position loads on all types of vehicles. They can tilt cabins, hoods or hatches on mobile-off-highway vehicles and perform numerous other operations on construction, agriculture and marine/off-shore equipment.

Applications

Lifting Aids

In this automobile lift, the lifting motion is provided by two inverted rotating ball screw jacks. Screw jacks can also be used in other types of lifting devices such as work table height adjustment, scissor tables, platform adjustment and leveling applications.

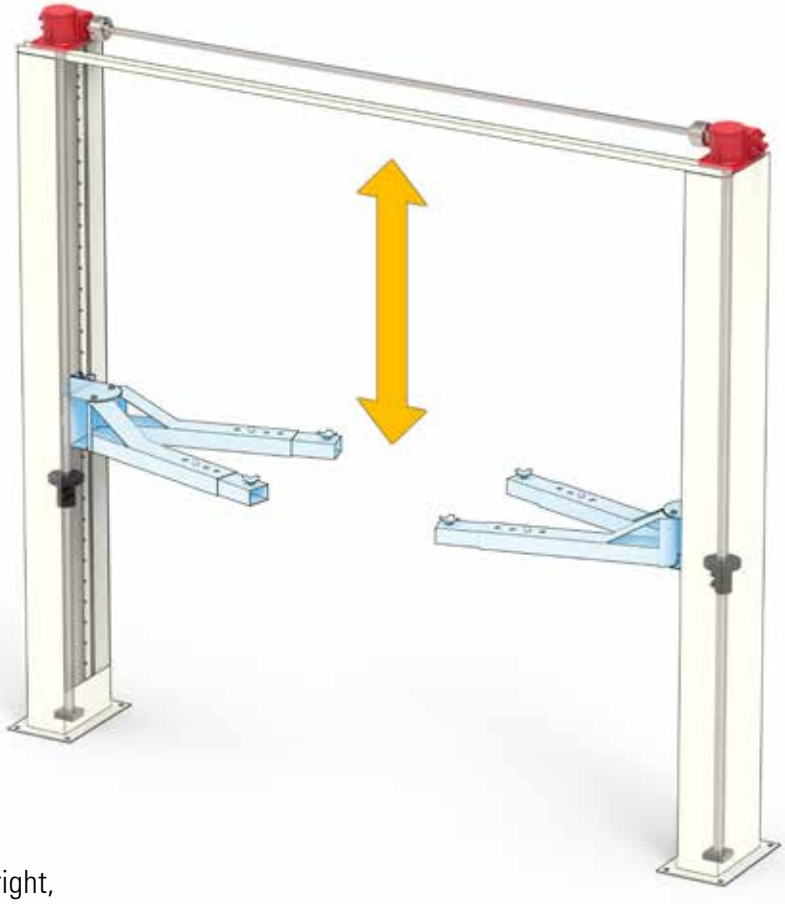

Printing Presses

This printing press application utilizes two upright, translating ball screw jacks to set the proper gauge on the feed rollers. The same type of solution can be used in many types of paper, plastic or sheet metal rolling applications.

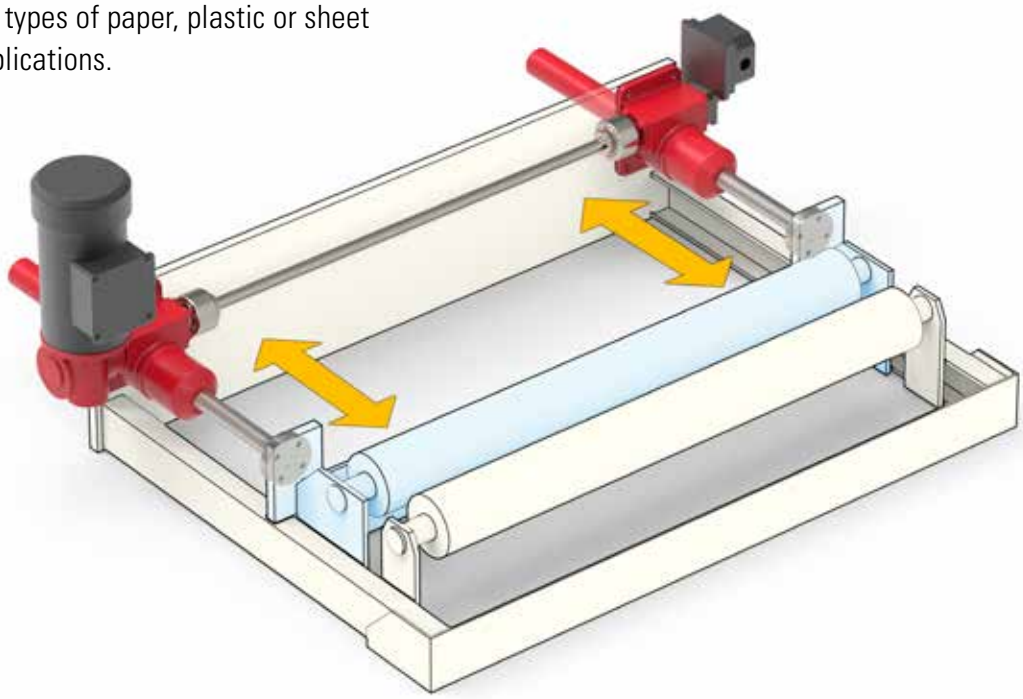

Ball Screw Jacks

ActionJac™ ball screw jacks have been designed to produce rated output forces with a minimum amount of input torque. Ball screw jacks use a worm gear set arrangement with an efficient ball screw and nut that reduces the amount of input torque to approximately one-third the torque required for the machine screw jack.

Ball Screws and Nuts

Thomson ball screw jacks are fitted with our own PowerTrac™ ball screws and nuts.

Straightness

PowerTrac ball screws are straight within 0.01 in/ft when shipped from the factory, and do not exceed 0.03 in in any six-foot section.

Material	Finish	Lead Accuracy	Screw Dia.	Screw Lengths
Alloy	black oxide	± 0.004 in/ft	0.375 to 4.000 in	up to 24 ft

Life

A jack assembly uses rolling elements to carry a load similar to an anti-friction (ball) bearing. These elements do not wear during normal use, but rather fatigue. Therefore, ball screw life is predictable and is determined by calculating the fatigue failure of the components. Proper lubrication, regular maintenance and operation within specified limits will allow PowerTrac ball screws to operate to the predicted life.

Backlash

Backlash (lash) is the relative axial movement between a screw and nut without rotation of the screw or nut. The axial movement between a new PowerTrac ball nut and screw will range from 0.003 to 0.015 in depending on size. Lash in ball screws will remain constant during normal use.

Selective Fit

When less than standard lash is desired, ball nuts can be custom-fit to a specific screw with selected bearing balls to minimize lash to 0.003 to 0.005 in depending on ball size. Select fitting may result in lower life.

Capacity

The maximum thrust load – including shock – that can be applied to the ball nut without damaging the assembly.

Ball Screw Jacks

Operating Load

The thrust load in pounds which, when applied to the ball nut and rotating screw assembly, will result in a minimum life of 1,000,000 in of travel.

Tension Load

A load that tends to "stretch" the screw. (See FIG. 1)

Compression Load

A load that tends to "squeeze" the screw. (See FIG. 1)

FIG. 1

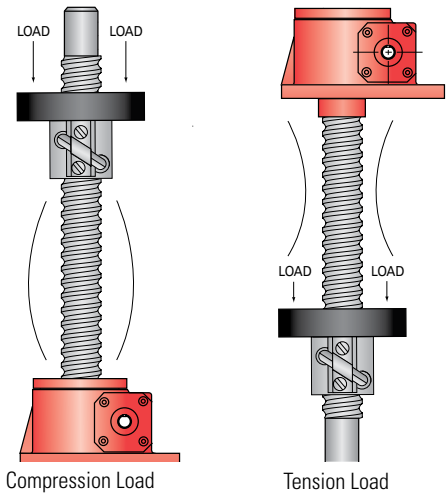

Overturning Load

A load that tends to rotate the nut radially around the longitudinal axis of the screw. (See FIG. 2)

Side Load

A load that is applied radially to the nut. (See FIG. 2)
Note: Although a side load will not prevent the ball screw from operating, the nut is not designed to operate with a side load, such as those generated from pulleys, drive belts, misalignment, etc.

Thrust Load

A load parallel to and concentric with the axis of the screw. (See FIG. 2)

FIG. 2

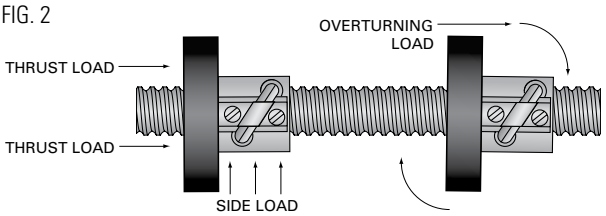

Standard Flange Orientation

Standard flange orientation varies with the number of holes in the flange. Unless otherwise specified, a factory-assembled flange will be oriented on the nut as shown. (See FIG. 3)

FIG. 3

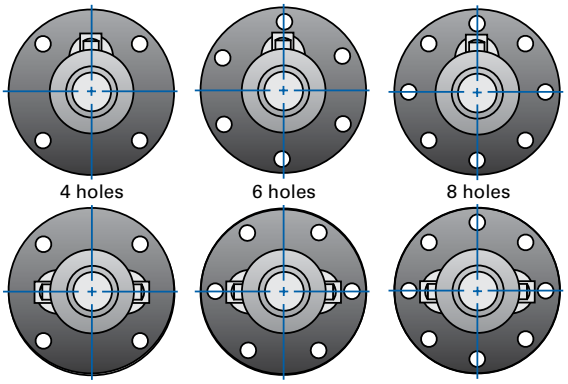

Proper Ball Nut Orientation

When a ball screw assembly is used in an orientation other than vertical, it is important to orient the return tubes to optimize ball nut operation. (See FIG. 4)

FIG. 4

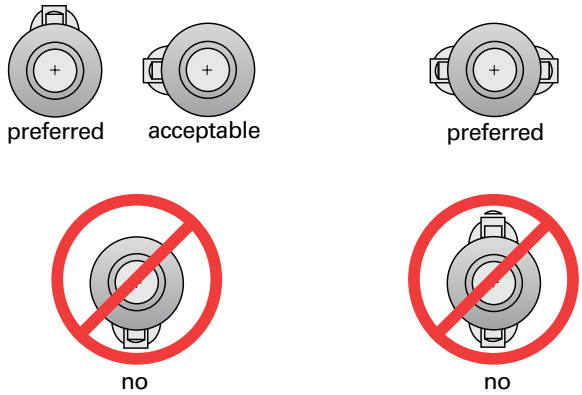

Ball Screw Jacks

Quick Reference

Model	Gear ratio	Capacity (ton)	Lifting screw diam. (in)	Screw lead (in)	Root diam. (in)	Turns of worm for 1 in travel	Max. input torque (in.-lb.)	Max. input (hp)	Max. worm speed @ rated load (rpm)	Max. load @ 1,750 rpm (lb)	Torque to raise 1 lb. (in-lb)	Tare drag torque (in-lb)	Backdrive holding torque (ft-lb)
0.5-BSJ	5:1	0.5	0.625	0.200	0.500	25.00	9.5	1⁄3	1800	1000	0.0095	1	1.00
	20:1	0.5	0.625	0.200	0.500	100.00	4.0	1⁄6	1800	1000	0.0040	1	0.25
0.5HL-BSJ	5:1	0.5	0.625	0.500	0.500	10.00	24.2	1⁄3	868	496	0.0242	1	2.00
	20:1	0.5	0.625	0.500	0.500	40.00	10.2	1⁄6	1030	588	0.0102	1	1.00
1-BSJ	5:1	1.0	0.750	0.200	0.602	25.00	19.0	1⁄2	1660	1895	0.0095	3	1.50
	20:1	1.0	0.625	0.200	0.602	100.00	9.0	1⁄4	1750	2000	0.0045	3	0.50
1HL-BSJ	5:1	1.0	0.750	0.500	0.602	10.00	48.2	1⁄2	654	747	0.0241	3	3.50
	20:1	1.0	0.750	0.500	0.602	40.00	9.0	1⁄4	691	790	0.0114	3	1.50
2-BSJ	6:1	2.0	1.000	0.250	0.820	24.00	40.0	2	1800	4000	0.0100	4	3.00
	12:1	2.0	1.000	0.250	0.820	48.00	26.0	1 1⁄2	1800	4000	0.0064	4	1.50
	24:1	2.0	1.000	0.250	0.820	96.00	17.0	1⁄2	1800	4000	0.0043	4	1.00
2R-BSJ	6:1	2.0	1.000	0.250	0.820	24.00	40.0	2	1800	4000	0.0100	4	3.00
	12:1	2.0	1.000	0.250	0.820	48.00	26.0	1 1⁄2	1800	4000	0.0064	4	1.50
	24:1	2.0	1.000	0.250	0.820	96.00	17.0	1⁄2	1800	4000	0.0043	4	1.00
2.5-BSJ	6:1	10.5	1.000	0.250	0.820	24.00	51.0	2	1800	5000	0.0102	5	4.00
	12:1	10.5	1.000	0.250	0.820	48.00	31.0	1 1⁄2	1800	5000	0.0061	5	2.00
	24:1	10.5	1.000	0.250	0.820	96.00	21.0	1⁄2	1500	4287	0.0042	5	1.50
2.5HL-BSJ	6:1	10.5	1.000	1.000	0.820	6.00	202.0	2	624	1783	0.0404	5	14.00
	12:1	10.5	1.000	1.000	0.820	12.00	122.0	1 1⁄2	775	2214	0.0244	5	6.00
	24:1	10.5	1.000	1.000	0.820	24.00	85.0	1⁄2	371	1059	0.0170	5	5.00
3-BSJ	6:1	3.0	1.172	0.413	0.870	14.53	100.0	2	1260	4313	0.0167	6	6.00
	24:1	3.0	1.172	0.413	0.870	58.10	42.0	1⁄2	750	2572	0.0070	6	2.00

Notes

1. The recommended maximum speed is 3,000 rpm provided that the recommended horsepower and temperature are not exceeded.
2. Input torque is shown as torque to lift one pound of load. Starting torque is 50% greater than torque shown. For loads less than 25% of rated loads, add tare drag torque.
3. Maximum (allowable) horsepower ratings are based on a 35% duty cycle at standard ambient temperature, with one minute on / two minutes off cycles. For operation at higher duty cycles or repeated use over any segment of the total travel, temperature must be monitored and remain less than 200°F.
4. Overload capacity of the ball screw jack is as follows: 10% for dynamic loads, 30% for static loads.
5. All ball screw jacks can backdrive and require some means of holding the load, such as a brake on the motor. The product specification pages show holding torque values. Holding torque represents the amount of input torque required to restrain the load and does not indicate recommended brake size to bring the dynamic load to a stop.
6. All units are suitable for intermittent operation providing that the housing temperature including ambient is not lower than -20°F or higher than +200°F. Factory supplied grease in standard units will operate in this range.

Ball Screw Jacks

Quick Reference

Model	Gear ratio	Capacity (ton)	Lifting screw diam. (in)	Screw lead (in)	Root diam. (in)	Turns of worm for 1 in travel	Max. input torque (in.-lb.)	Max. input (hp)	Max. worm speed @ rated load (rpm)	Max. load @ 1,750 rpm (lb)	Torque to raise 1 lb. (in-lb)	Tare drag torque (in-lb)	Backdrive holding torque (ft-lb)
5-BSJ	6:1	5	5.50	0.473	1.140	12.66	183	3	1033	5904	0.0183	10	14
	24:1	5	5.50	0.473	1.140	50.66	73	3⁄4	647	3700	0.0073	10	5
5HL-BSJ	6:1	5	5.50	1.000	1.140	6.00	387	3	488	2792	0.0387	10	30
	24:1	5	5.50	1.000	1.140	24.00	153	3⁄4	308	1765	0.0153	10	10
10-BSJ	8:1	10	5.50	0.473	1.140	16.88	302	5	1043	11925	0.0151	20	13
	24:1	10	5.50	0.473	1.140	50.66	153	1 1⁄2	618	7016	0.0077	20	4
10HL-BSJ	8:1	10	5.50	1.000	1.140	8.00	638	5	494	5645	0.0319	20	26
	24:1	10	5.50	1.000	1.140	24.00	323	1 1⁄2	293	3335	0.0162	20	6
20-BSJ	8:1	20	5.25	0.500	1.850	16.00	626	7 1⁄2	755	17204	0.0157	40	27
	24:1	20	5.25	0.500	1.850	48.00	314	2 1⁄2	501	11397	0.0079	40	7
20HL-BSJ	8:1	20	5.25	1.000	1.850	8.00	1253	7 1⁄2	377	8629	0.0313	40	54
	24:1	20	5.25	1.000	1.850	24.00	628	2 1⁄2	251	5737	0.0157	40	13
30-BSJ	10.66:1	30	3.00	0.660	2.480	16.16	969	11	715	24515	0.0162	60	21
	32:1	30	3.00	0.660	2.480	48.48	503	3 1⁄2	438	15006	0.0084	60	5
30HL-BSJ	10.66:1	30	3.00	1.500	2.480	7.11	2292	11	315	10794	0.0367	60	67
	32:1	30	3.00	1.500	2.480	21.33	1144	3 1⁄2	193	6600	0.0191	60	15
50-BSJ	10.66:1	50	4.00	1.000	3.338	10.66	2560	16	394	22509	0.0256	90	75
	32:1	50	4.00	1.000	3.338	32.00	1390	5	227	12954	0.0139	90	10
75-BSJ	10.66:1	75	4.00	1.000	3.338	10.66	3660	28	482	41328	0.0244	155	110
	32:1	75	4.00	1.000	3.338	32.00	1680	9	338	28970	0.0112	155	25

7. For higher or lower operating temperature ranges, consult Thomson.
8. Accessories such as boots, limit switches, top plates and clevises are available.
9. Catalog dimensions are representative only and are subject to change without notice. For construction, use only certified prints.
10. Units are not to be used for the purpose of personnel support or movement.
11. End-of-travel stops are not provided.
12. Tare drag torque need only be added if operating under 25% rated load.
13. Starting torque is 50% greater than torque shown.
14. Measurements listed are for non-keyed jacks. See individual jack pages for keyed jack info.

Ball Screw Jacks

Life Expectancy

Model	Operating Load (lb)	Minimum inches of travel (in. × 10^3)			
		Upright and inverted		Upright and inverted rotating	
		Standard (in)	High-lead (in)	Standard (in)	High-lead (in)
0.5-BSJ 0.5HL-BSJ	1000	377	708	471	885
	750	893	1678	116	2097
	500	3014	5662	3767	7078
	250	24111	45299	56623	56623
1-BSJ 1HL-BSJ	2000	133	2019	166	2524
	1500	316	4785.9	394	5982
	1000	1065	16152	1331	20190
	500	8518	129218	10648	161523
2-BSJ 2R-BSJ	4000	52	—	66	—
	3000	124	—	155	—
	2000	419	—	524	—
	1000	3351	—	4189	—
2.5-BSJ 2.5HL-BSJ	5000	27	63	34	79
	3750	64	149	79	186
	2500	215	503	268	629
	1250	1716	4026	2145	5031
3-BSJ	6000	219	—	273	—
	4500	518	—	648	—
	3000	1750	—	2187	—
	1500	13996	—	17495	—
5-BSJ 5HL-BSJ	10000	812	346	1015	432
	7500	1925	819	2406	1024
	5000	6497	2765	8121	1024
	2500	51972	22123	64965	27653

Ball Screw Jacks

Life Expectancy

Model	Operating Load (lb)	Minimum inches of travel (in. × 10^3)			
		Upright and inverted		Upright and inverted rotating	
		Standard (in)	High-lead (in)	Standard (in)	High-lead (in)
10-BSJ 10HL-BSJ	20000	102	43	127	54
	15000	241	103	301	128
	10000	812	346	1015	432
	5000	6497	2765	8121	3457
20-BSJ 20HL-BSJ	40000	121	234	151	292
	30000	287	554	358	692
	20000	967	1869	1209	2336
	10000	7737	14952	9672	18690
30-BSJ 30HL-BSJ	60000	323	572	403	715
	45000	764	1355	955	1694
	30000	2579	4574	3223	5718
	15000	20630	36596	25787	45744
50-BSJ	100000	505	—	631	—
	75000	1196	—	1495	—
	50000	4037	—	5046	—
	25000	32292	—	40365	—
75-BSJ	150000	150	—	187	—
	112500	354	—	443	—
	75000	1196	—	1495	—
	37500	9568	—	11960	—

Ball Screw Jacks

Column Strength

Column strength is the ability of the lift shaft to hold compressive loads without buckling. With longer screw lengths, column strength may be substantially lower than nominal jack capacity. If the lift shaft is in tension only, the screw jack travel is limited by the available screw material or by the critical speed of the screw. If there is any possibility for the lift shaft to go into compression, the application should be sized for sufficient column strength.

The chart below is used to determine the required jack size in applications where the lift shaft is loaded in compression.

Available Lift Screw Lengths

Thomson has the capacity to make long ball screws for special applications. Rotating screw jacks can be built with a larger diameter lift screw for greater column strength, or a different lead to change the jack operating speed.

To Use This Chart

Find a point at which the maximum length "L" intersects the maximum load. Be sure the jack selected is above and to the right of that point.

Note: chart does not include a design factor. The chart assumes proper jack alignment with no bending loads on the screw. Effects from side loading are not included in this chart. Jacks operating horizontally with long lift shafts can experience bending from the weight of the screw.

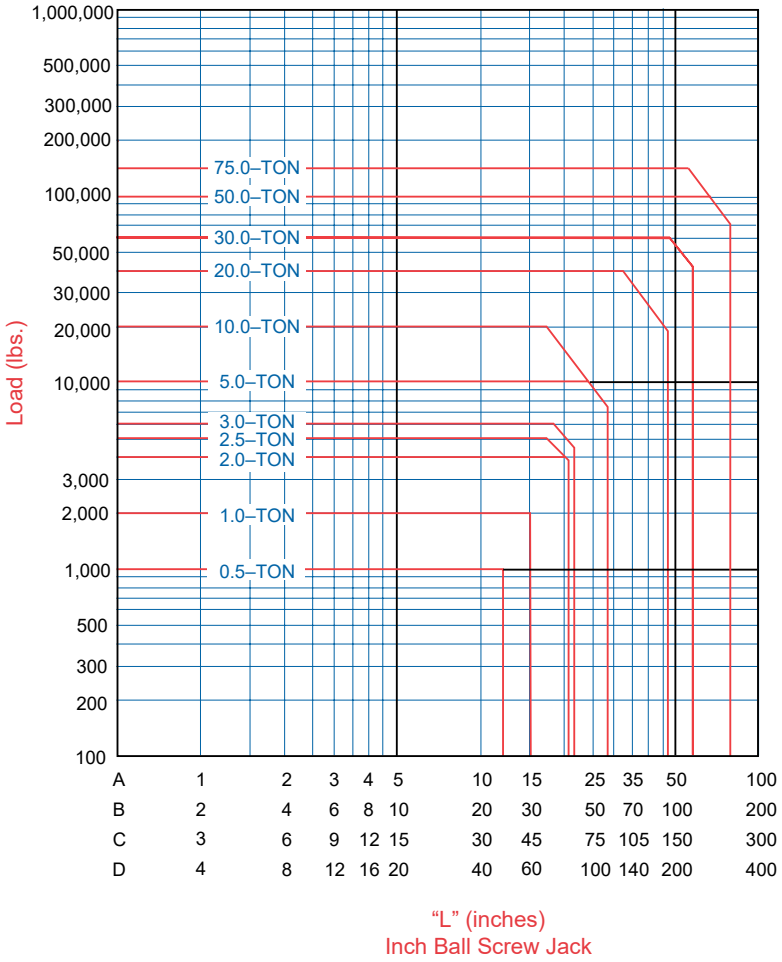

MOUNTING CONDITIONS

A

ONE END FIXED
ONE END FREE

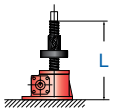

B

ONE END
BY CLEVIS,
BASE END BY
CLEVIS OR
TRUNNION PLATE

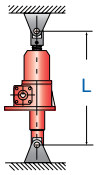

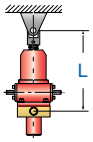

C

ONE END FIXED,
ONE END
SUPPORTED
(CLEVIS
ATTACHED TO
GUIDE STRUCTURE)

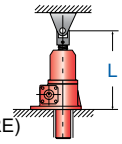

ONE END FIXED,
ONE END
SUPPORTED
(RADIAL BEARING)

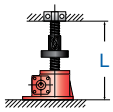

D

BOTH ENDS FIXED
(TOP PLATE
ATTACHED TO
GUIDED
STRUCTURE)

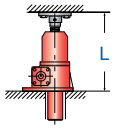

Ball Screw Jacks

Ordering Key

1	2	3		4		5		6	7		8		9
2.5-BSJ-	**U**	**6:1**	**/**	**10LT-1**	**/**	**2CA-2C**	**/**	**F**	**T**	**/**	**24.5**	**/**	**BS**

1. Ball screw model

0.5-BSJ
0.5HL-BSJ
1-BSJ
1HL-BSJ
2-BSJ
2R-BSJ
2.5-BSJ
2.5HL-BSJ
3-BSJ
5-BSJ
5HL-BSJ
10-BSJ
10HL-BSJ
20-BSJ
20HL-BSJ
30-BSJ
30HL-BSJ
50-BSJ
75-BSJ

2. Configuration

U = upright
I = inverted
UR = upright rotating
IR = inverted rotating
DC = double clevis
UK = upright keyed
IK = inverted keyed

3. Gear ratio

See product pages for available gear ratios

4 and 5 Shaft order code

A position note must be included.
Both shaft extensions must be specified.

10LT - 1 — CCW position 1, 3, 5 and 7
CW position 2, 4, 6 and 8

No accessory (position 1 or 2)
SSE = Standard shaft extension
000 = Delete shaft extension
SPC = Special modofied shaft extension

With motor mounts without motor (position 1 or 2)
Used on 2.5 - 20 ton jacks. See pages 96 - 97.

With motor mounts with motor (position 1 or 2)
Used on 2.5 - 20 ton jacks. See page 104.

Right angle reducers position 1 - 8
Used on 2.5 - 20 ton jacks. See pages 98 - 99.

Limit switches position position 1C or E through 8C or E
Used on 2 - 75 ton jacks. See pages 114 - 117.

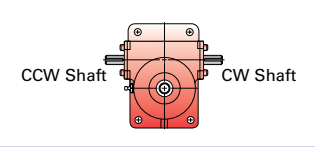

6. Housing configuration

F = standard flange base
C = clevis base
T = trunnion base

7. Screw configuration

Translating models (U and I configurations)
T = standard threaded end
C = clevis end
P = top plate

Rotating models (UR and IR configurations)
A = travel nut position "A"
B = travel nut position "B"

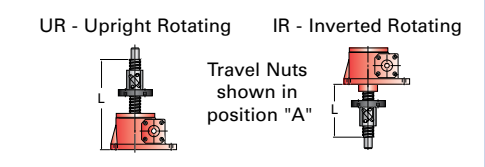

8. Travel

Translating models (U and I configurations)
Use actual travel in inches.

Rotating models (UR and IR configurations)
Use "L" dimension in inches.

9. Modifier list

Optional codes
E = in-line encoder (motor or motor mount required)
B = bellows boots (se page 123. Must calculate extend and retract length)
P = tube sensor system PNP
N = tube sensor system NPN

Required codes
S = standard (no additional description required)
M = modified (additional description required)

Ball Screw Jacks - 0.5-BSJ / 0.5HL-BSJ

Top view
0.5-BSJ / 0.5HL-BSJ

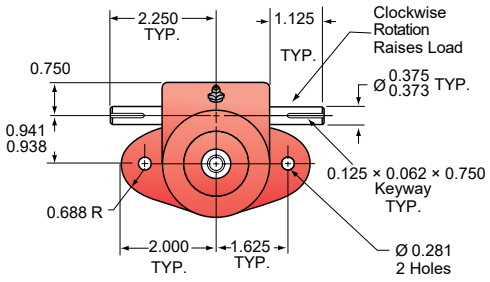

Upright models
0.5-BSJ-U / 0.5HL-BSJ-U

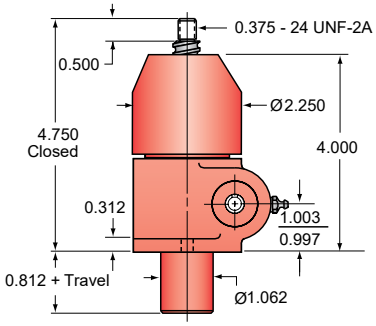

Inverted models
0.5-BSJ-I / 0.5HL-BSJ-I

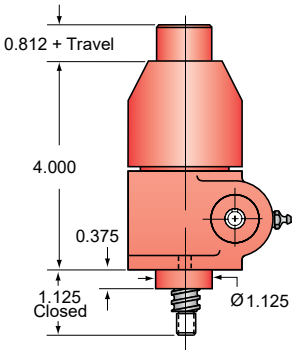

Ball nut and flange
0.5-BSJ

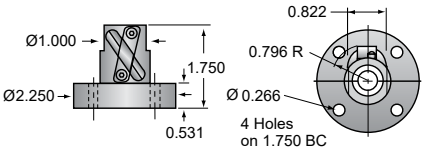

Ball nut and flange
0.5HL-BSJ

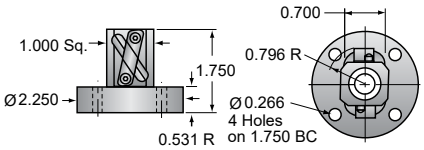

Top plate (optional)
0.5-BSJ / 0.5HL-BSJ
p/n: 9000-00-12

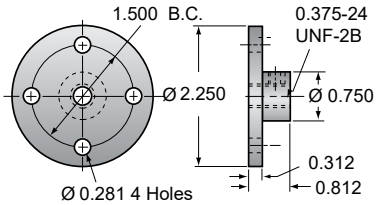

Technical Specifications

Model	Load capacity (ton)	Screw size, diam (in) × lead (in)	Gear ratio	Turns of worm for 1 in travel	Max. input torque (in-lb)	Max. allowable input (hp)	Tare drag torque (in-lb)	Backdrive holding torque @ max. load (ft-lb)
0.5-BSJ	0.5	0.625 × 0.200	5:1	25	9.5	1⁄3	1	1.00
			20:1	100	4.0	1⁄6	1	0.25
0.5HL-BSJ	0.5	0.625 × 0.500	5:1	10	24.2	1⁄3	1	2.00
			20:1	40	10.2	1⁄6	1	1.00

Screw Specifications

Root diameter (in)	0.5
Start torque	1.5 × running torque
Approx. weight (lb) base weight per inch of travel grease	 3.00 0.03 0.30

Caution: Jack is self-lowering. Lifting screw must be secured to prevent rotation for non-keyed units.

Ball Screw Jacks - 0.5-BSJ / 0.5HL-BSJ

Upright rotating models[1]
0.5-BSJ-UR / 0.5HL-BSJ-UR

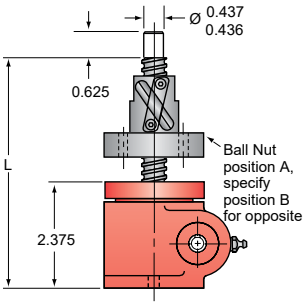

1) At order specify "L" dimension L (min) = travel + 4.38

Inverted rotating models[2]
0.5-BSJ-IR / 0.5HL-BSJ-IR

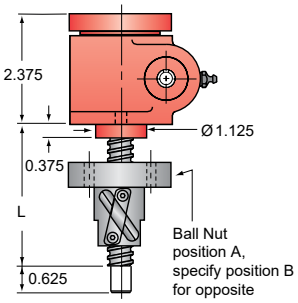

2) At order specify "L" dimension L (min) = travel + 2.62

Upright keyed models
0.5-BSJ-IK / 0.5HL-BSJ-UK

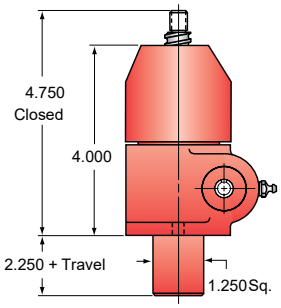

Inverted keyed models
0.5-BSJ-IK / 0.5HL-BSJ-IK

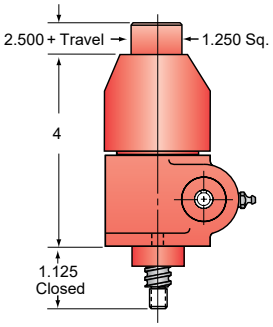

Clevis end (optional)
0.5-BSJ / 0.5HL-BSJ

p/n: 9001-00-12

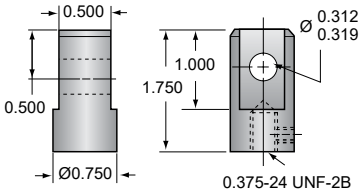

	Non-keyed			Keyed		
	Torque to raise 1 lb (in-lb)	Max. worm speed @ rated load (rpm)	Max. load @ 1750 rpm (lb)	Torque to raise 1 lb (in-lb)	Max. worm speed @ rated load (rpm)	Max. load @ 1750 rpm (lb)
	0.0095	1800	1000	0.0105	1800	1000
	0.0040	1800	1000	0.0044	1080	1000
	0.0242	868	496	0.0266	790	450
	0.0102	1030	588	0.0112	936	534

Ball Screw Jacks - 1-BSJ

Top view
1-BSJ

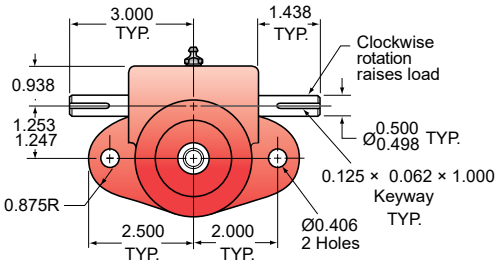

Upright models
1-BSJ-U

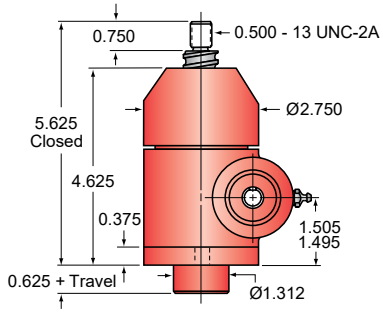

Inverted models
1-BSJ-I

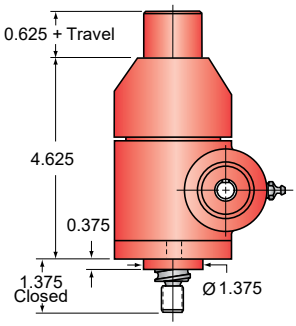

Double clevis models
1-BSJ-DC

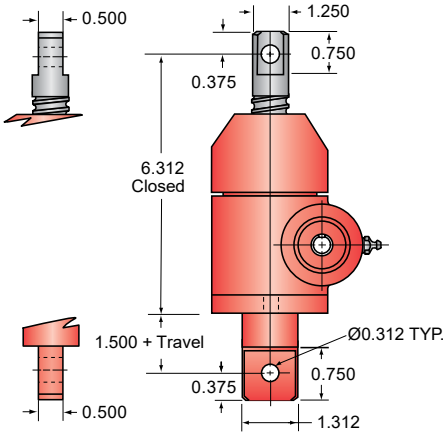

Ball nut and flange
1-BSJ

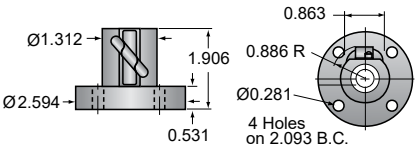

Top plate (optional)
1-BSJ
p/n: 9000-00-11

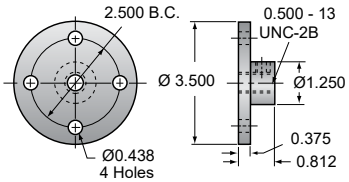

Technical Specifications

Model	Load capacity (ton)	Screw size, diam (in) × lead (in)	Gear ratio	Turns of worm for 1 in travel	Max. input torque (in-lb)	Max. allowable input (hp)	Tare drag torque (in-lb)	Backdrive holding torque @ max. load (ft-lb)
1-BSJ	1	0.750 × 0.200	5:1	25	19	1⁄2	3	1.5
			20:1	100	9	1⁄4	3	0.5

Screw Specifications

Root diameter (in)	0.602
Start torque	1.5 × running torque
Approx. weight (lb) base weight per inch of travel grease	 8.00 0.04 0.50

Caution: Jack is self-lowering. Lifting screw must be secured to prevent rotation for non-keyed units.

Ball Screw Jacks - 1-BSJ

Upright rotating models[1]
1-BSJ-UR

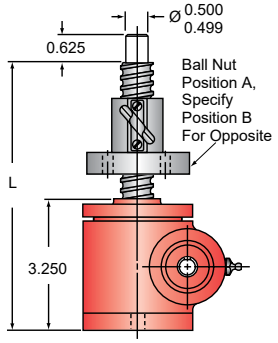

1) At order specify "L" dimension L (min) = travel + 5.66

Inverted rotating models[2]
1-BSJ-IR

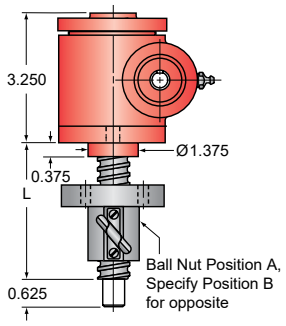

2) At order specify "L" dimension L (min) = travel + 2.78

Upright keyed models
1-BSJ-UK

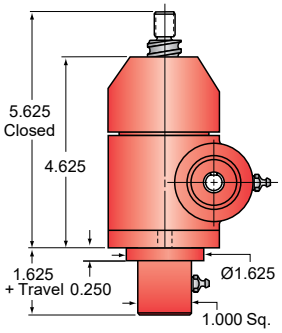

Inverted keyed models
1-BSJ-IK

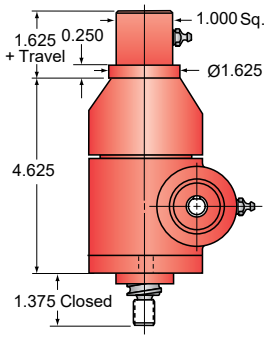

Clevis end (optional)
1-BSJ

p/n: 9001-00-11

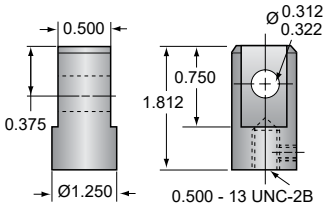

	Non-keyed			Keyed		
	Torque to raise 1 lb (in-lb)	Max. worm speed @ rated load (rpm)	Max. load @ 1750 rpm (lb)	Torque to raise 1 lb (in-lb)	Max. worm speed @ rated load (rpm)	Max. load @ 1750 rpm (lb)
	0.0095	1660	1895	0.0104	1515	1731
	0.0045	1750	2000	0.0049	1608	1837

Ball Screw Jacks - 1HL-BSJ

Top view
1HL-BSJ

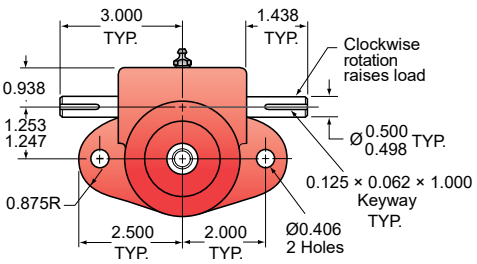

Upright models
1HL-BSJ-U

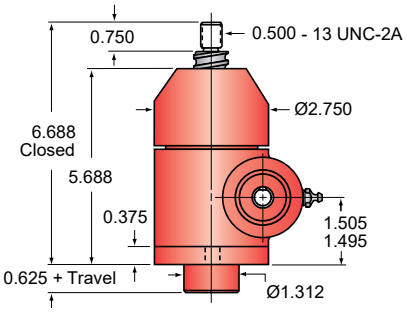

Inverted models
1HL-BSJ-I

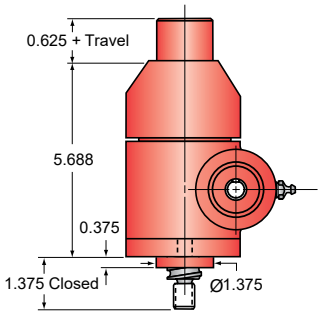

Double clevis models
1HL-BSJ-DC

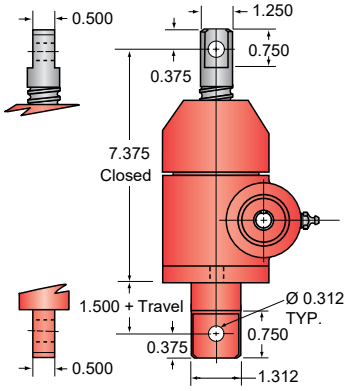

Ball nut and flange
1HL-BSJ

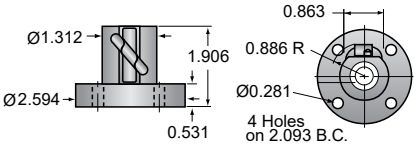

Top plate (optional)
1HL-BSJ
p/n: 9000-00-11

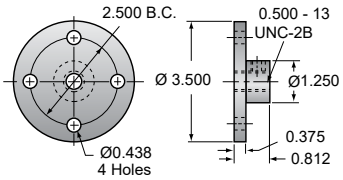

Technical Specifications

Model	Load capacity (ton)	Screw size, diam (in) × lead (in)	Gear ratio	Turns of worm for 1 in travel	Max. input torque (in-lb)	Max. allowable input (hp)	Tare drag torque (in-lb)	Backdrive holding torque @ max. load (ft-lb)
1HL-BSJ	1	0.750 × 0.500	5:1	10	48.2	1⁄2	3	3.5
			20:1	40	22.8	1⁄4	3	1.5

Screw Specifications

Root diameter (in)	0.602
Start torque	1.5 × running torque
Approx. weight (lb) base weight per inch of travel grease	 8.00 0.04 0.50

Caution: Jack is self-lowering. Lifting screw must be secured to prevent rotation for non-keyed units.

Ball Screw Jacks - 1HL-BSJ

Upright rotating models[1]
1HL-BSJ-UR

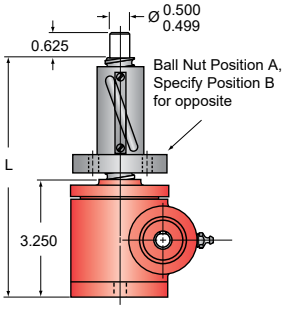

1) At order specify "L" dimension L (min) = travel + 6.69

Inverted rotating models[2]
1HL-BSJ-IR

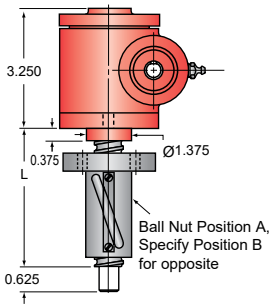

2) At order specify "L" dimension L (min) = travel + 3.81

Upright keyed models
1HL-BSJ-UK

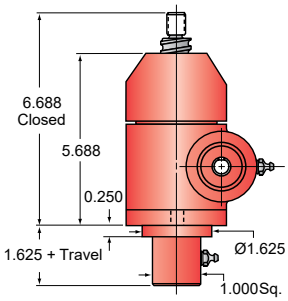

Inverted keyed models
1HL-BSJ-IK

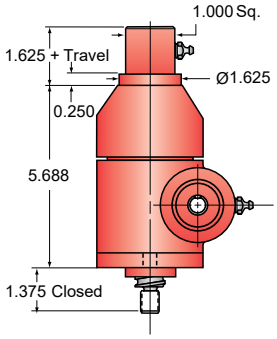

Clevis end (optional)
1HL-BSJ
p/n: 9001-00-11

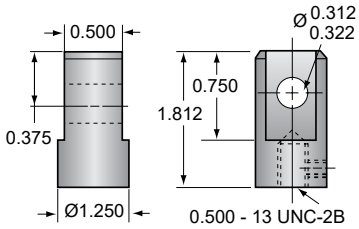

	Non-keyed			Keyed		
	Torque to raise 1 lb (in-lb)	Max. worm speed @ rated load (rpm)	Max. load @ 1750 rpm (lb)	Torque to raise 1 lb (in-lb)	Max. worm speed @ rated load (rpm)	Max. load @ 1750 rpm (lb)
	0.0241	654	747	0.0265	595	680
	0.0114	691	790	0.0125	628	718

Ball Screw Jacks - 2-BSJ

Top view
2-BSJ

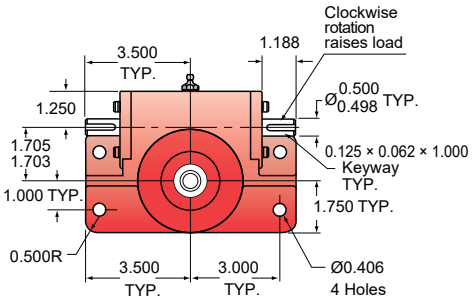

Upright models
2-BSJ-U

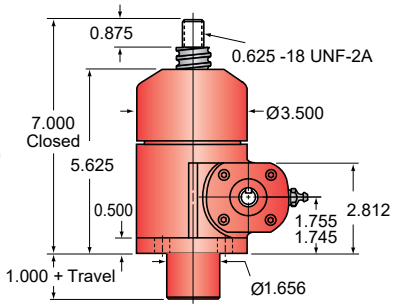

Inverted models
2-BSJ-I

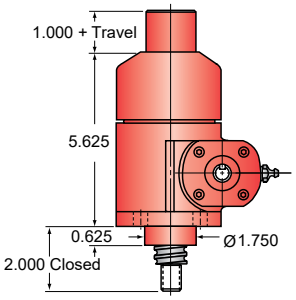

Double clevis models
2-BSJ-DC

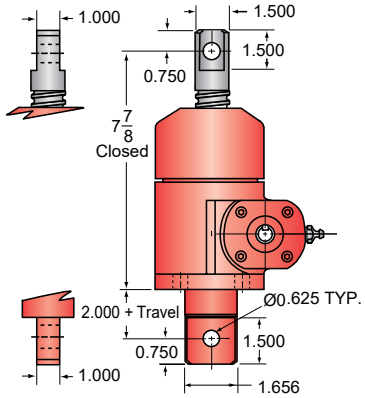

Ball nut and flange
2-BSJ

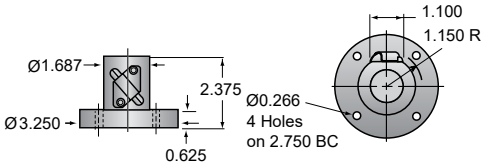

Top plate (optional)
2-BSJ
p/n: 9000-00-01

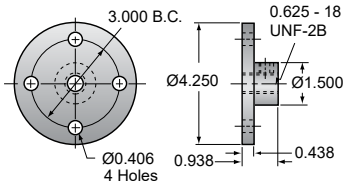

Technical Specifications

Model	Load capacity (ton)	Screw size, diam (in) × lead (in)	Gear ratio	Turns of worm for 1 in travel	Max. input torque (in-lb)	Max. allowable input (hp)	Tare drag torque (in-lb)	Backdrive holding torque @ max. load (ft-lb)
2-BSJ	2	1.000 × 0.250	6:1	24	40	2	4	3.0
			12:1	48	26	1 1⁄2	4	1.5
			24:1	96	17	1⁄2	4	1.0

Screw Specifications

Root diameter (in)	0.820
Start torque	1.5 × running torque
Approx. weight (lb) base weight per inch of travel grease	 18.0 0.6 0.5

Caution: Jack is self-lowering. Lifting screw must be secured to prevent rotation for non-keyed units.

Ball Screw Jacks - 2-BSJ

Upright rotating models[1]
2-BSJ-UR

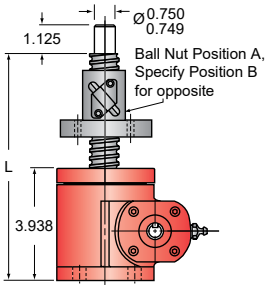

1) At order specify "L" dimension L (min) = travel + 7.66

Inverted rotating models[2]
2-BSJ-IR

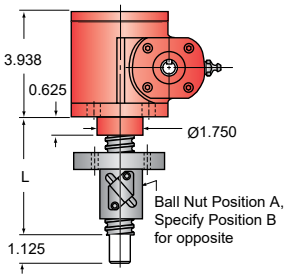

2) At order specify "L" dimension L (min) = travel + 4.12

Upright keyed models
2-BSJ-UK

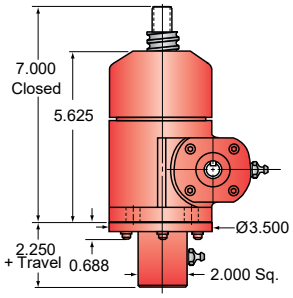

Inverted keyed models
2-BSJ-IK

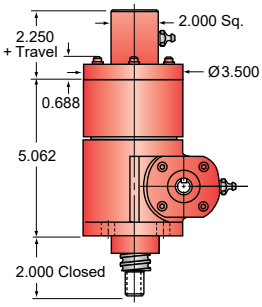

Clevis end (optional)
2-BSJ
p/n: 9001-00-01

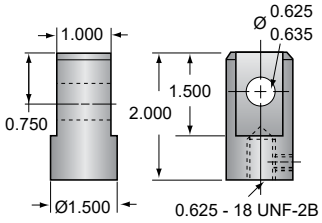

Motor mount (optional)
See page 96 - 97

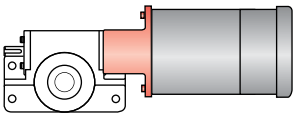

Limit switch (optional)
See page 114 - 117

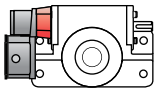

	Non-keyed			Keyed		
	Torque to raise 1 lb (in-lb)	Max. worm speed @ rated load (rpm)	Max. load @ 1750 rpm (lb)	Torque to raise 1 lb (in-lb)	Max. worm speed @ rated load (rpm)	Max. load @ 1750 rpm (lb)
	0.0100	1800	4000	0.0110	1636	3740
	0.0064	1800	4000	0.0070	1636	3740
	0.0043	1800	4000	0.0047	1636	3740

Ball Screw Jacks - 2R-BSJ

Top view
2R-BSJ

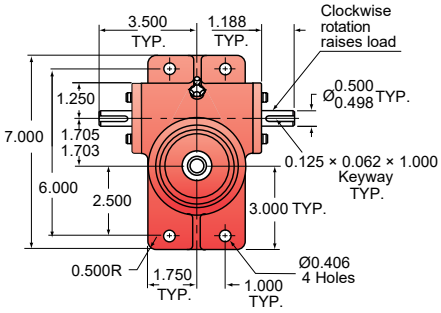

Upright models
2R-BSJ-U

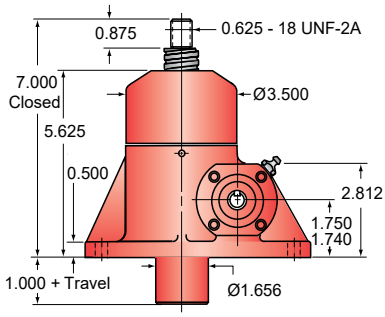

Inverted models
2R-BSJ-I

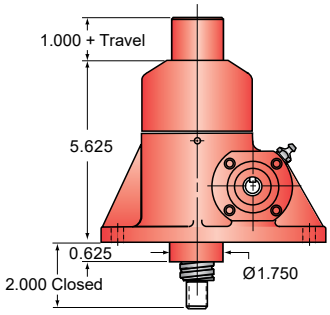

Double clevis models
2R-BSJ-DC

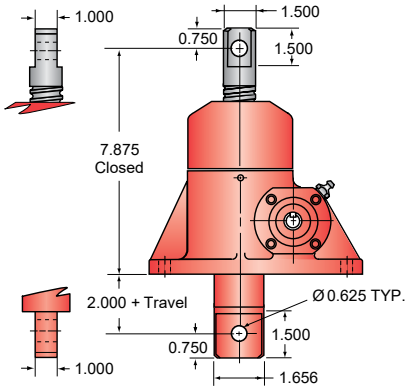

Ball nut and flange
2R-BSJ

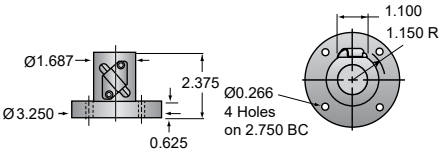

Top plate (optional)
2R-BSJ

p/n: 9000-00-01

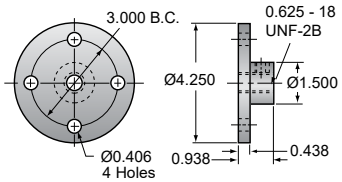

Technical Specifications

Model	Load capacity (ton)	Screw size, diam (in) × lead (in)	Gear ratio	Turns of worm for 1 in travel	Max. input torque (in-lb)	Max. allowable input (hp)	Tare drag torque (in-lb)	Backdrive holding torque @ max. load (ft-lb)
2R-BSJ	2	1.000 × 0.250	6:1	24	40	2	4	3.0
			12:1	48	26	1 1⁄2	4	1.5
			24:1	96	17	1⁄2	4	1.0

Screw Specifications

Root diameter (in)	0.820
Start torque	1.5 × running torque
Approx. weight (lb) base weight per inch of travel grease	 18.0 0.6 0.5

Caution: Jack is self-lowering. Lifting screw must be secured to prevent rotation for non-keyed units.

Ball Screw Jacks - 2R-BSJ

Upright rotating models[1]
2R-BSJ-UR

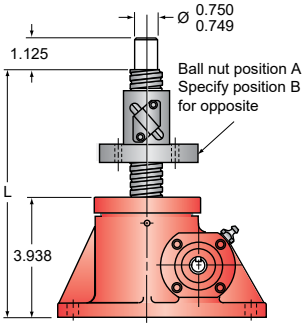

1) At order specify "L" dimension L (min) = travel + 7.31

Inverted rotating models[2]
2R-BSJ-IR

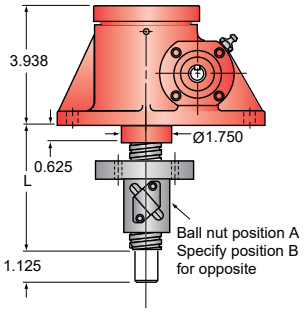

2) At order specify "L" dimension L (min) = travel + 4.12

Upright keyed models
2R-BSJ-UK

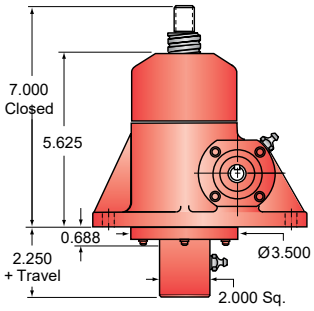

Inverted keyed models
2R-BSJ-IK

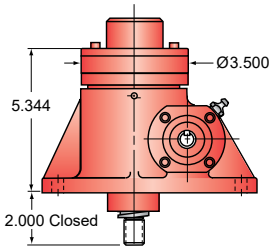

Clevis end (optional)
2R-BSJ
p/n: 9001-00-01

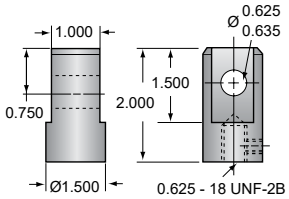

Motor mount (optional)
See page 96 - 97

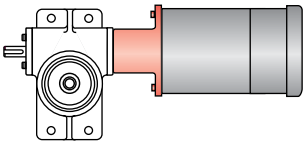

Limit switch (optional)
See page 114 - 117

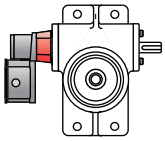

	Non-keyed			Keyed		
	Torque to raise 1 lb (in-lb)	Max. worm speed @ rated load (rpm)	Max. load @ 1750 rpm (lb)	Torque to raise 1 lb (in-lb)	Max. worm speed @ rated load (rpm)	Max. load @ 1750 rpm (lb)
	0.0100	1800	4000	0.0110	1636	3740
	0.0064	1800	4000	0.0070	1636	3740
	0.0043	1800	4000	0.0047	1636	3740

Ball Screw Jacks - 2.5-BSJ

Top view
2.5-BSJ

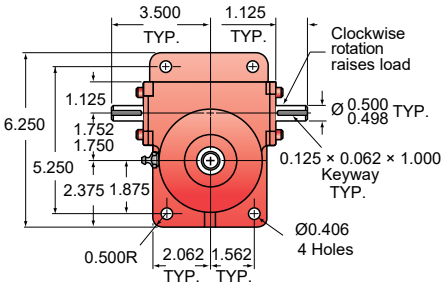

Upright models
2.5-BSJ-U

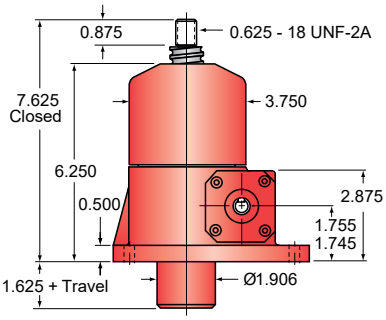

Inverted models
2.5-BSJ-I

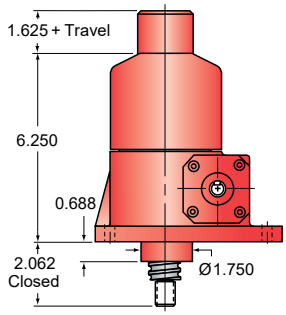

Double clevis models
2.5-BSJ-DC

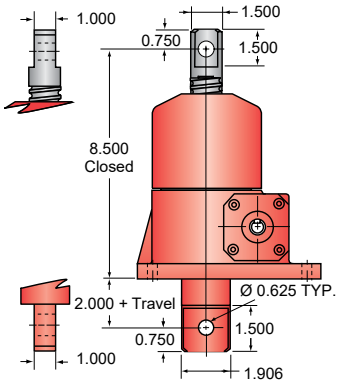

Ball nut and flange
2.5-BSJ

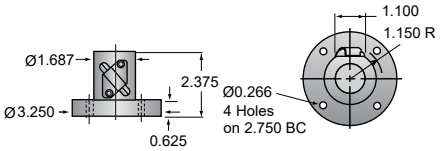

Top plate (optional)
2.5-BSJ
p/n: 9000-00-01

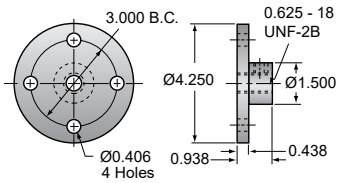

Technical Specifications

Model	Load capacity (ton)	Screw size, diam (in) × lead (in)	Gear ratio	Turns of worm for 1 in travel	Max. input torque (in-lb)	Max. allowable input (hp)	Tare drag torque (in-lb)	Backdrive holding torque @ max. load (ft-lb)
2.5-BSJ	2.5	1.000 × 0.250	6:1	24	51	2	5	4.0
			12:1	48	31	1 1⁄2	5	2.0
			24:1	96	21	1⁄2	5	1.5

Screw Specifications

Root diameter (in)	0.820
Start torque	1.5 × running torque
Approx. weight (lb) base weight per inch of travel grease	 17.0 0.6 0.5

Caution: Jack is self-lowering. Lifting screw must be secured to prevent rotation for non-keyed units.

Ball Screw Jacks - 2.5-BSJ

Upright rotating models[1]
2.5-BSJ-UR

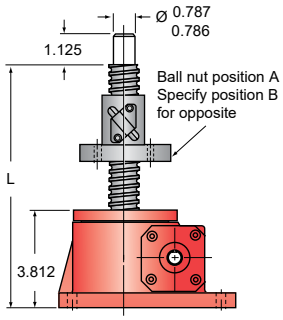

1) At order specify "L" dimension L (min) = travel + 7.19

Inverted rotating models[2]
2.5-BSJ-IR

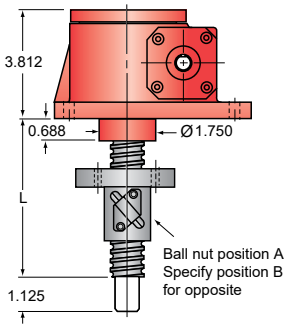

2) At order specify "L" dimension L (min) = travel + 4.06

Upright keyed models
2.5-BSJ-UK

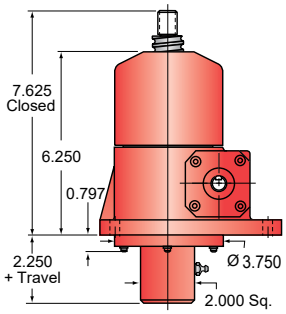

Inverted keyed models
2.5-BSJ-IK

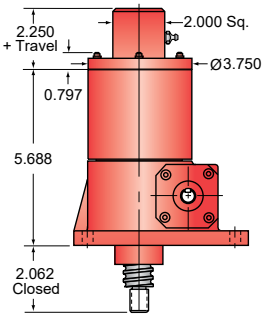

Clevis end (optional)
2.5-BSJ

p/n: 9001-00-01

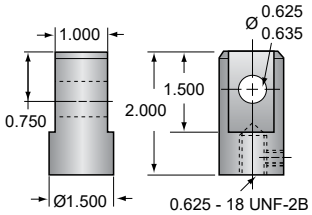

Motor mount (optional)

See page 96 - 97

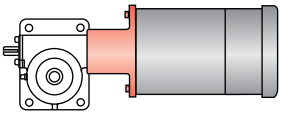

Limit switch (optional)

See page 114 - 117

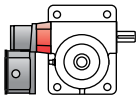

Secondary reducer (optional)

See page 98 - 103

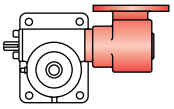

	Non-keyed			Keyed		
	Torque to raise 1 lb (in-lb)	Max. worm speed @ rated load (rpm)	Max. load @ 1750 rpm (lb)	Torque to raise 1 lb (in-lb)	Max. worm speed @ rated load (rpm)	Max. load @ 1750 rpm (lb)
	0.0102	1800	5000	0.0112	1636	4674
	0.0061	1800	5000	0.0067	1636	4674
	0.0042	1500	4287	0.0046	1370	3914

Ball Screw Jacks - 2.5HL-BSJ

Top view
2.5HL-BSJ

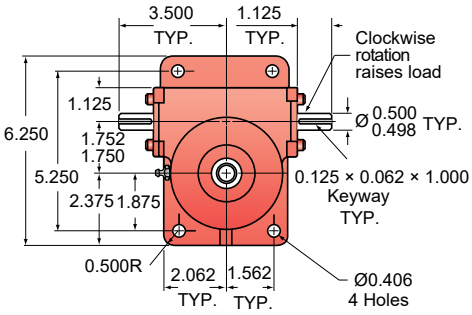

Upright models
2.5HL-BSJ-U

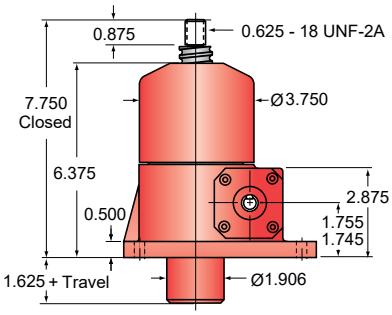

Inverted models
2.5HL-BSJ-I

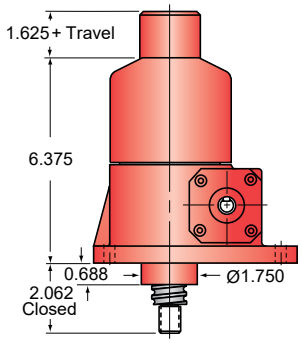

Double clevis models
2.5HL-BSJ-DC

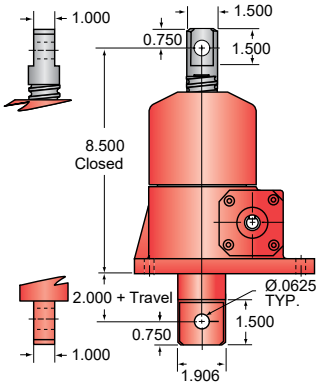

Ball nut and flange
2.5HL-BSJ

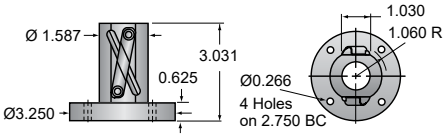

Top plate (optional)
2.5HL-BSJ
p/n: 9000-00-01

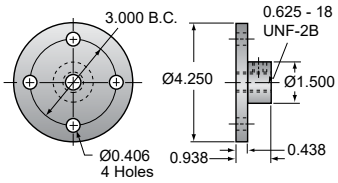

Technical Specifications

Model	Load capacity (ton)	Screw size, diam (in) × lead (in)	Gear ratio	Turns of worm for 1 in travel	Max. input torque (in-lb)	Max. allowable input (hp)	Tare drag torque (in-lb)	Backdrive holding torque @ max. load (ft-lb)
2.5HL-BSJ	2.5	1.000 × 1.000	6:1	6	202	2	5	14
			12:1	12	122	1 1⁄2	5	6
			24:1	24	85	1⁄2	5	5

Screw Specifications

Root diameter (in)	0.820
Drag torque (in-lb)	5
Start torque	1.5 × running torque
Approx. weight (lb) base weight per inch of travel grease	 17.0 0.6 0.5

Caution: Jack is self-lowering. Lifting screw must be secured to prevent rotation for non-keyed units.

Ball Screw Jacks - 2.5HL-BSJ

Upright rotating models[1]
2.5HL-BSJ-UR

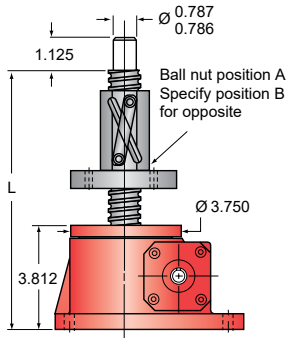

1) At order specify "L" dimension L (min) = travel + 7.84

Inverted rotating models[2]
2.5HL-BSJ-IR

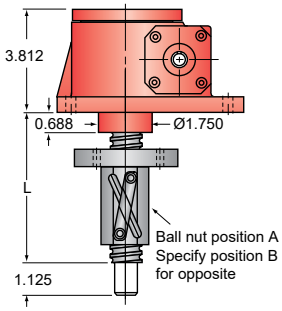

2) At order specify "L" dimension L (min) = travel + 4.72

Upright keyed models
2.5HL-BSJ-UK

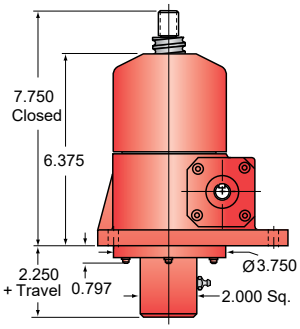

Inverted keyed models
2.5HL-BSJ-IK

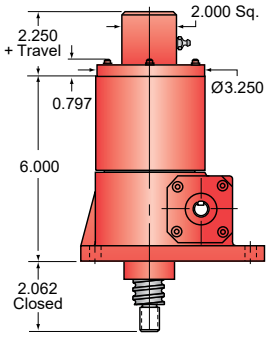

Clevis end (optional)
2.5HL-BSJ

p/n: 9001-00-01

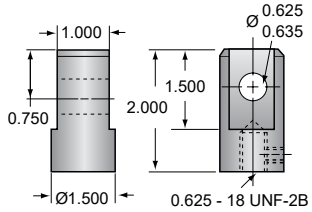

Motor mount (optional)

See page 96 - 97

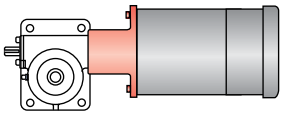

Limit switch (optional)

See page 114 - 117

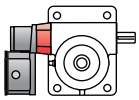

Secondary reducer (optional)

See page 98 - 103

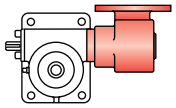

	Non-keyed			Keyed		
	Torque to raise 1 lb (in-lb)	Max. worm speed @ rated load (rpm)	Max. load @ 1750 rpm (lb)	Torque to raise 1 lb (in-lb)	Max. worm speed @ rated load (rpm)	Max. load @ 1750 rpm (lb)
	0.0404	624	1783	0.0444	567	1620
	0.0244	775	2214	0.0268	705	2013
	0.0170	371	1059	0.0187	337	964

Ball Screw Jacks - 3-BSJ

Top view
3L-BSJ

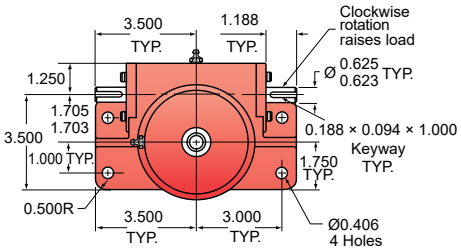

Upright models
3-BSJ-U

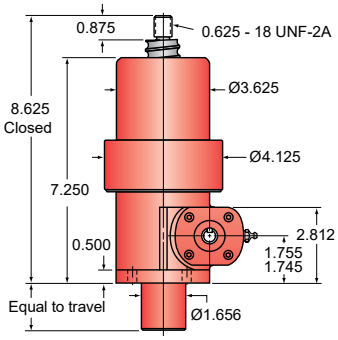

Inverted models
3-BSJ-I

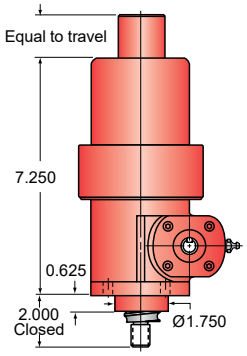

Double clevis models
3-BSJ-DC

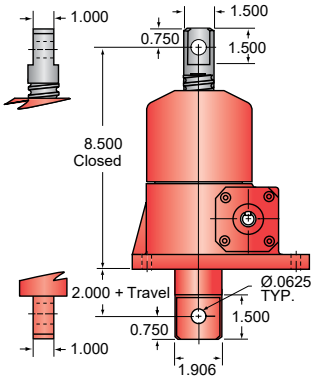

Ball nut and flange
3-BSJ

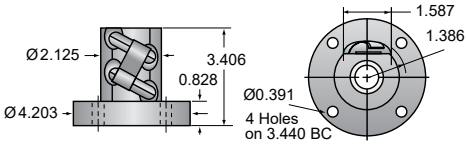

Top plate (optional)
3-BSJ
p/n: 9000-00-01

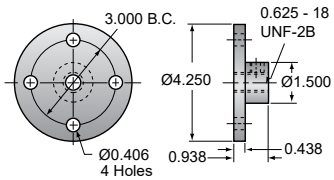

Technical Specifications

Model	Load capacity (ton)	Screw size, diam (in) × lead (in)	Gear ratio	Turns of worm for 1 in travel	Max. input torque (in-lb)	Max. allowable input (hp)	Tare drag torque (in-lb)	Backdrive holding torque @ max. load (ft-lb)
3-BSJ	3	1.171 × 0.413	6:1	14.53	100	2	6	6
			24:1	58.10	42	1⁄2	6	2

Screw Specifications

Root diameter (in)	0.870
Start torque	1.5 × running torque
Approx. weight (lb) base weight per inch of travel grease	 18.5 0.6 0.5

Caution: Jack is self-lowering. Lifting screw must be secured to prevent rotation for non-keyed units.

Ball Screw Jacks - 3-BSJ

$\frac{1}{32}$

Upright rotating models[1]
3-BSJ-UR

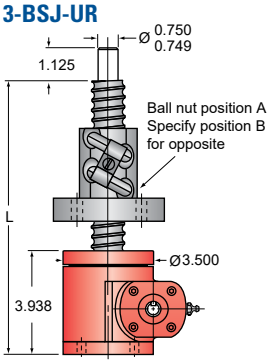

1) At order specify "L" dimension L (min) = travel + 8.34

Inverted rotating models[2]
3-BSJ-IR

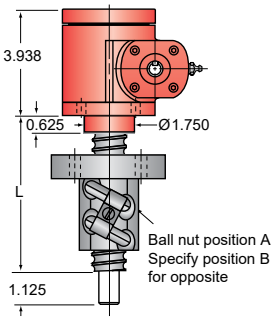

2) At order specify "L" dimension L (min) = travel + 5.03

Upright keyed models
3-BSJ-UK

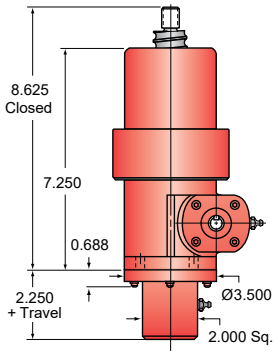

Inverted keyed models
3-BSJ-IK

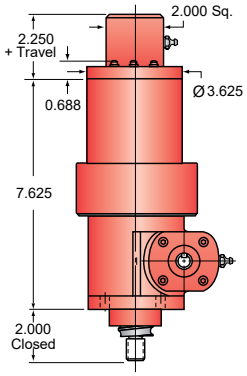

Clevis end (optional)
3-BSJ

p/n: 9001-00-01

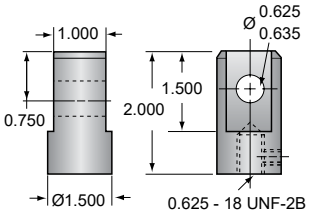

Motor mount (optional)

See page 96 - 97

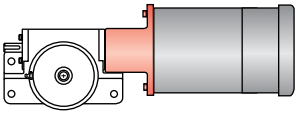

Limit switch (optional)

See page 114 - 117

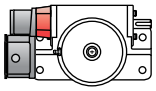

Secondary reducer (optional)

See page 98 - 103

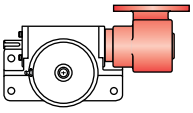

	Non-keyed			Keyed		
	Torque to raise 1 lb (in-lb)	Max. worm speed @ rated load (rpm)	Max. load @ 1750 rpm (lb)	Torque to raise 1 lb (in-lb)	Max. worm speed @ rated load (rpm)	Max. load @ 1750 rpm (lb)
	0.0167	1260	4313	0.0184	1142	3914
	0.0070	750	2572	0.0077	682	2338

Ball Screw Jacks - 5-BSJ / 5HL-BSJ

Top view
5-BSJ / 5HL-BSJ

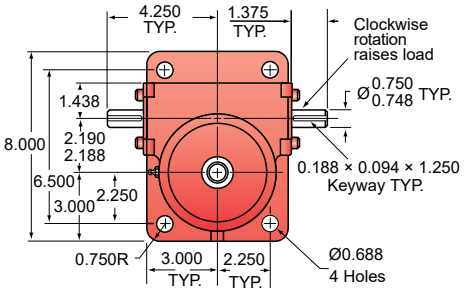

Upright models
5-BSJ-U / 5HL-BSJ-U

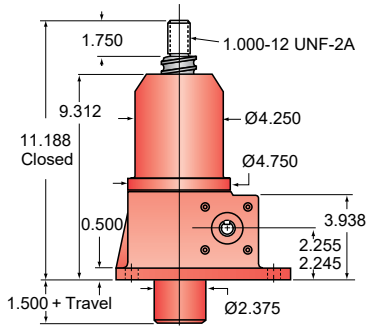

Inverted models
5-BSJ-I / 5HL-BSJ-I

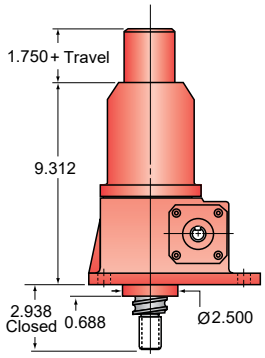

Double clevis models
5-BSJ-DC

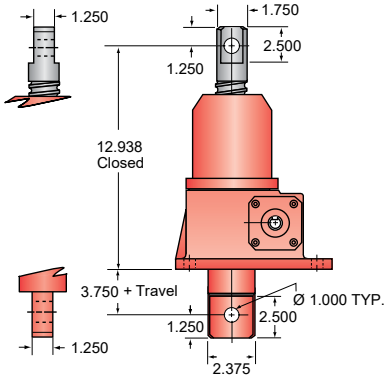

Ball nut and flange
5-BSJ

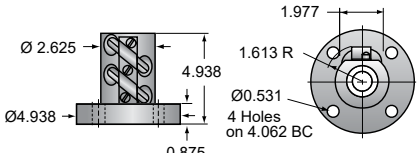

Ball nut and flange
5HL-BSJ

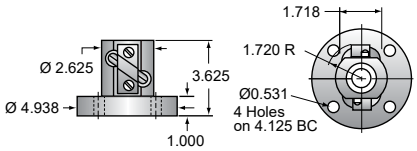

Technical Specifications

Model	Load capacity (ton)	Screw size, diam (in) × lead (in)	Gear ratio	Turns of worm for 1 in travel	Max. input torque (in-lb)	Max. allowable input (hp)	Tare drag torque (in-lb)	Backdrive holding torque @ max. load (ft-lb)
5-BSJ	5	1.500 × 0.473	6:1	12.66	183	3	10	14
			24:1	50.66	73	3⁄4	10	5
5HL-BSJ	5	1.500 × 1.000	6:1	6.00	387	3	10	30
			24:1	24.00	153	3⁄4	10	10

Screw Specifications

Root diameter (in)	1.140
Start torque	1.5 × running torque
Approx. weight (lb) base weight per inch of travel grease	 35.0 0.6 1.0

Caution: Jack is self-lowering. Lifting screw must be secured to prevent rotation for non-keyed units.

Ball Screw Jacks - 5-BSJ / 5HL-BSJ

Upright rotating models[1]
5-BSJ-UR / 5HL-BSJ-UR

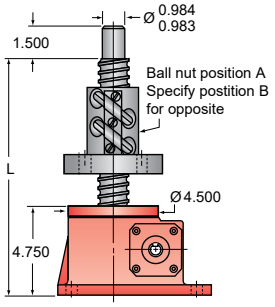

1) At order specify "L" dimension L (min) = travel + 10.06

Inverted rotating models[2]
5-BSJ-IR / 5HL-BSJ-IR

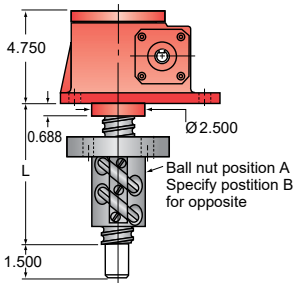

2) At order specify "L" dimension L (min) = travel + 6.00

Upright keyed models
5-BSJ-IK / 5HL-BSJ-UK

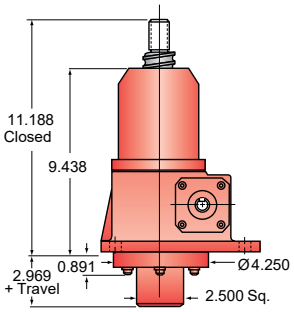

Inverted keyed models
5-BSJ-IK / 5HL-BSJ-IK

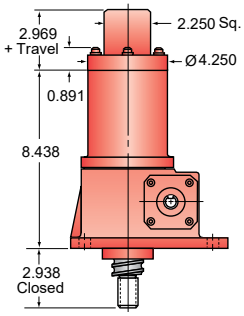

Top plate (optional)
5-BSJ / 5HL-BSJ
p/n: 9000-00-02

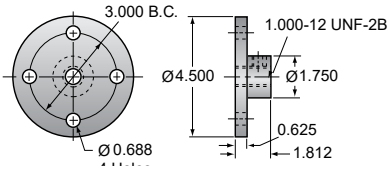

Clevis end (optional)
10-BSJ / 10HL-BSJ
p/n: 9001-00-02

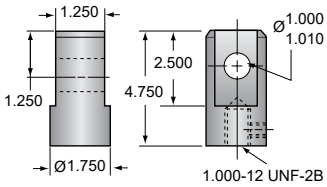

Motor mount (optional)
See page 96 - 97

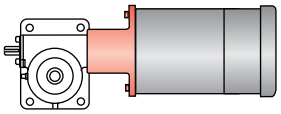

Limit switch (optional)
See page 114 - 117

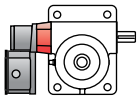

Secondary reducer (optional)
See page 98 - 103

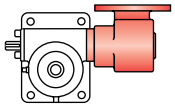

	Non-keyed			Keyed		
	Torque to raise 1 lb (in-lb)	Max. worm speed @ rated load (rpm)	Max. load @ 1750 rpm (lb)	Torque to raise 1 lb (in-lb)	Max. worm speed @ rated load (rpm)	Max. load @ 1750 rpm (lb)
	0.0183	1033	5904	0.0201	941	5375
	0.0073	547	3700	0.0080	590	3376
	0.0387	498	2792	0.0426	444	2537
	0.0153	308	1765	0.0168	280	1600

Ball Screw Jacks - 10-BSJ / 10HL-BSJ

Top view
10-BSJ / 10HL-BSJ

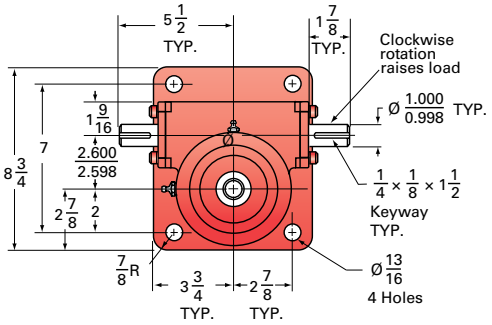

Upright models
10-BSJ-U / 10HL-BSJ-U

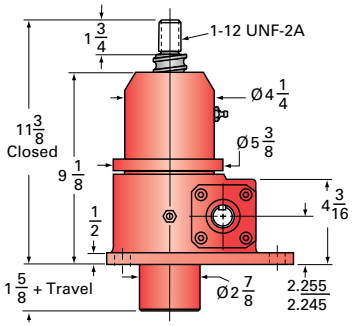

Inverted models
10-BSJ-I / 10HL-BSJ-I

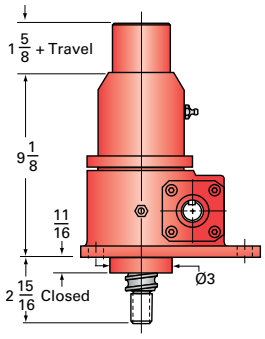

Double clevis models
10-BSJ-DC / 10HL-BSJ-DC

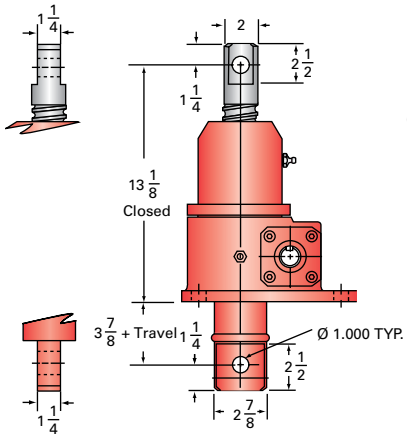

Ball nut and flange
10-BSJ

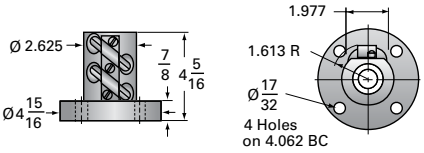

Ball nut and flange
10HL-BSJ

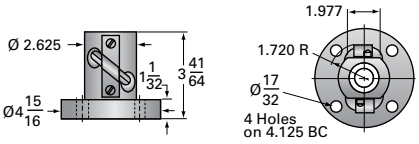

Technical Specifications

Model	Load capacity (ton)	Screw size, diam (in) × lead (in)	Gear ratio	Turns of worm for 1 in travel	Max. input torque (in-lb)	Max. allowable input (hp)	Tare drag torque (in-lb)	Backdrive holding torque @ max. load (ft-lb)
10-BSJ	10	1.500 × 0.473	8:1	16.88	302	5	20	13
			24:1	50.66	153	1½	20	4
10HL-BSJ	10	1.500 × 1.000	8:1	8.00	638	5	20	26
			24:1	24.00	323	1½	20	6

Screw Specifications

Root diameter (in)	1.140
Start torque	1.5 × running torque
Approx. weight (lb) base weight per inch of travel grease	 50.0 0.8 1.5

Caution: Jack is self-lowering. Lifting screw must be secured to prevent rotation for non-keyed units.

Ball Screw Jacks - 10-BSJ / 10HL-BSJ

Upright rotating models[1]
10-BSJ-UR / 10HL-BSJ-UR

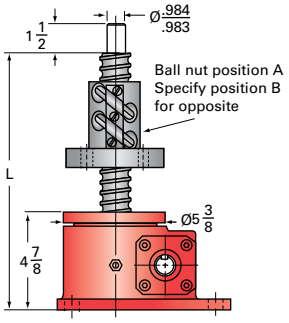

1) At order specify "L" dimension L (min) = travel + 10.19

Inverted rotating models[2]
10-BSJ-IR / 10HL-BSJ-IR

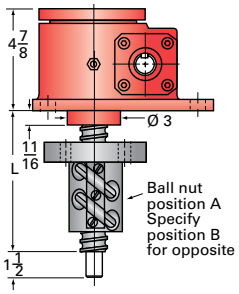

2) At order specify "L" dimension L (min) = travel + 6.00

Upright keyed models
10-BSJ-IK / 10HL-BSJ-UK

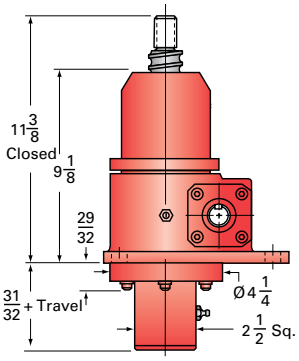

Inverted keyed models
10-BSJ-IK / 10HL-BSJ-IK

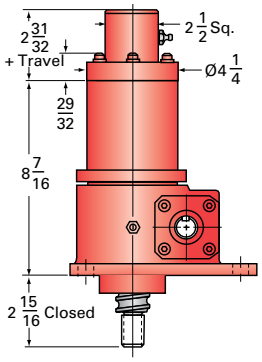

Top plate (optional)
10-BSJ / 10HL-BSJ
p/n: 9000-00-04

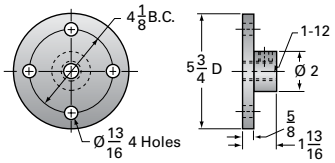

Clevis end (optional)
10-BSJ / 10HL-BSJ
p/n: 9001-00-04

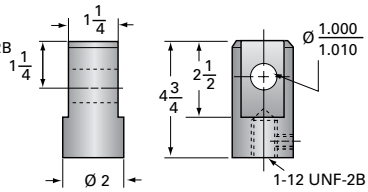

Motor mount (optional)
See page 96 - 97

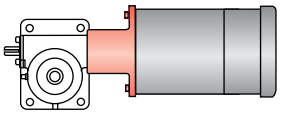

Limit switch (optional)
See page 114 - 117

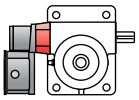

Secondary reducer (optional)
See page 98 - 103

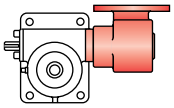

	Non-keyed			Keyed		
	Torque to raise 1 lb (in-lb)	Max. worm speed @ rated load (rpm)	Max. load @ 1750 rpm (lb)	Torque to raise 1 lb (in-lb)	Max. worm speed @ rated load (rpm)	Max. load @ 1,50 rpm (lb)
	0.0151	1043	11925	0.0166	949	10847
	0.0077	618	7016	0.0085	556	6355
	0.0319	494	5645	0.0351	449	5132
	0.0162	293	3334	0.0178	266	3044

Ball Screw Jacks - 20-BSJ / 20HL-BSJ

Top view
20-BSJ / 20HL-BSJ

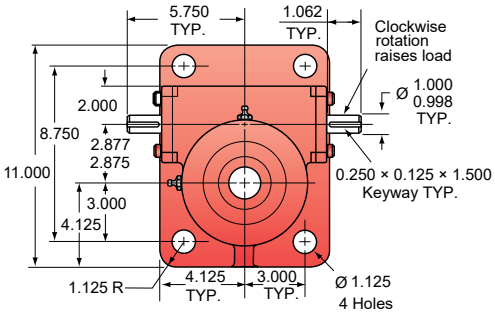

Upright models
20-BSJ-U / 20HL-BSJ-U

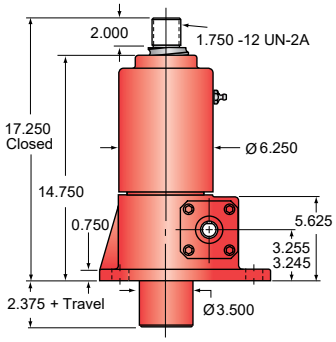

Inverted models
20-BSJ-I / 20HL-BSJ-I

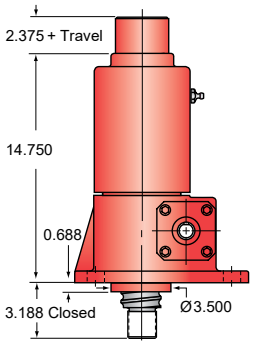

Ball nut and flange
20-BSJ

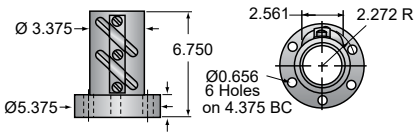

Ball nut and flange
20HL-BSJ

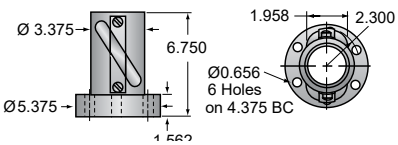

Top plate (optional)
20-BSJ / 20HL-BSJ
p/n: 9000-00-06

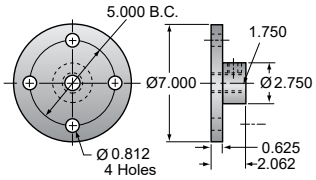

Technical Specifications

Model	Load capacity (ton)	Screw size, diam (in) × lead (in)	Gear ratio	Turns of worm for 1 in travel	Max. input torque (in-lb)	Max. allowable input (hp)	Tare drag torque (in-lb)	Backdrive holding torque @ max. load (ft-lb)
20-BSJ	20	2.250 × 0.500	8:1	16	626	7½	40	27
			24:1	48	314	2½	40	7
20HL-BSJ	20	2.250 × 0.500	8:1	8	1253	7½	40	54
			24:1	24	628	2½	40	13

Screw Specifications

Root diameter (in)	1.850
Start torque	1.5 × running torque
Approx. weight (lb) base weight per inch of travel grease	 85.0 1.5 2.2

Caution: Jack is self-lowering. Lifting screw must be secured to prevent rotation for non-keyed units.

Ball Screw Jacks - 20-BSJ / 20HL-BSJ

Upright rotating models[1]
20-BSJ-UR / 20HL-BSJ-UR

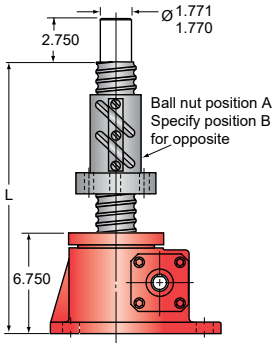

1) At order specify "L" dimension L (min) = travel + 14.50

Inverted rotating models[2]
20-BSJ-IR / 20HL-BSJ-IR

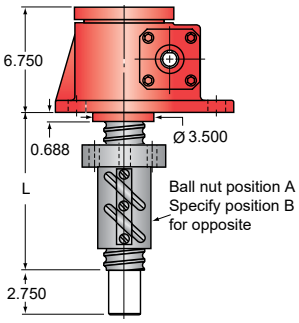

2) At order specify "L" dimension L (min) = travel + 8.44

Upright keyed models
20-BSJ-IK / 20HL-BSJ-UK

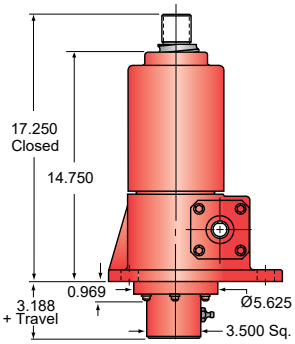

Inverted keyed models
20-BSJ-IK / 20HL-BSJ-IK

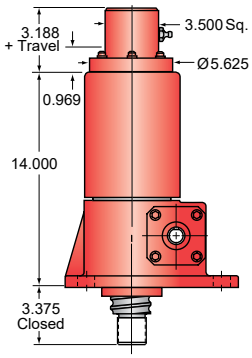

Clevis end (optional)
20-BSJ / 20HL-BSJ

p/n: 9001-00-06

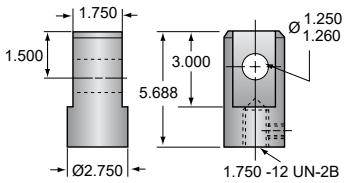

Motor mount (optional)

See page 96 - 97

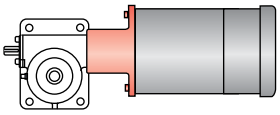

Limit switch (optional)

See page 114 - 117

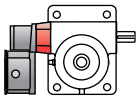

Secondary reducer (optional)

See page 98 - 103

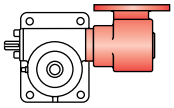

	Non-keyed			Keyed		
	Torque to raise 1 lb (in-lb)	Max. worm speed @ rated load (rpm)	Max. load @ 1750 rpm (lb)	Torque to raise 1 lb (in-lb)	Max. worm speed @ rated load (rpm)	Max. load @ 1750 rpm (lb)
	0.0157	755	17204	0.0173	683	15613
	0.0079	501	11397	0.0087	453	10349
	0.0313	377	8629	0.0344	343	7840
	0.0157	251	5737	0.0173	228	5211

Ball Screw Jacks - 30-BSJ / 30HL-BSJ

Top view
30-BSJ / 30HL-BSJ

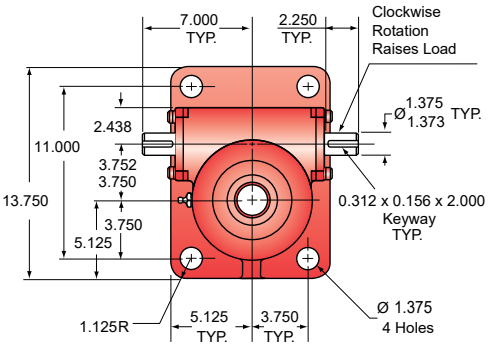

Upright models
30-BSJ-U / 30HL-BSJ-U

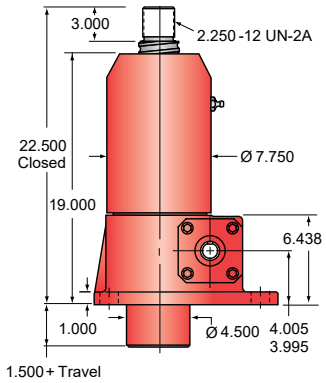

Inverted models
30-BSJ-I / 30HL-BSJ-I

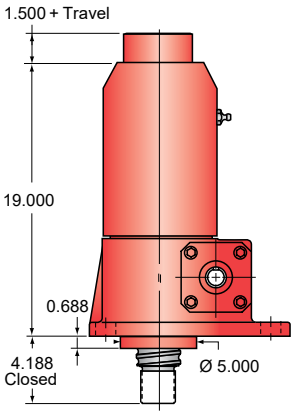

Ball nut and flange
30-BSJ

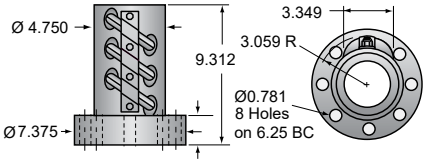

Ball nut and flange
30HL-BSJ

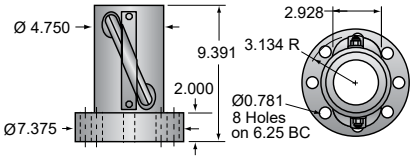

Top plate (optional)
30-BSJ / 30HL-BSJ
p/n: 9000-00-08

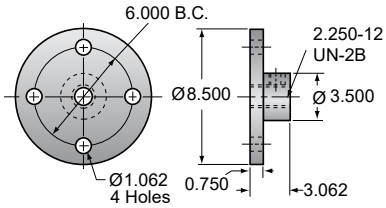

Technical Specifications

Model	Load capacity (ton)	Screw size, diam (in) × lead (in)	Gear ratio	Turns of worm for 1 in travel	Max. input torque (in-lb)	Max. allowable input (hp)	Tare drag torque (in-lb)	Backdrive holding torque @ max. load (ft-lb)
30-BSJ	30	3.000 × 0.660	10.67:1	16.16	989	11	60	21
			32:1	48.48	503	3½	60	5
30HL-BSJ	30	3.000 × 1.500	10.67:1	7.11	2292	11	60	67
			32:1	21.33	1144	3½	60	15

Screw Specifications

Root diameter (in)	2.480
Start torque	1.5 × running torque
Approx. weight (lb) base weight per inch of travel grease	 220.0 2.4 3.5

Caution: Jack is self-lowering. Lifting screw must be secured to prevent rotation for non-keyed units.

Ball Screw Jacks - 30-BSJ / 30HL-BSJ

Upright rotating models[1]
30-BSJ-UR / 20HL-BSJ-UR

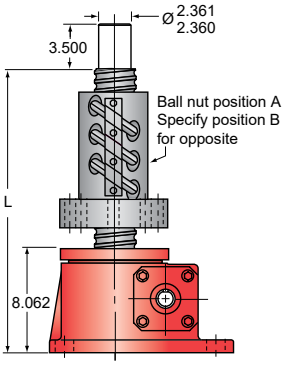

1) At order specify "L" dimension L (min) = travel + 18.38

Inverted rotating models[2]
30-BSJ-IR / 20HL-BSJ-IR

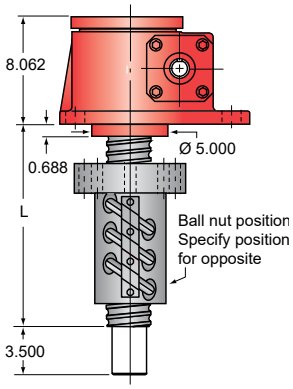

2) At order specify "L" dimension L (min) = travel + 11.00

Upright keyed models
30-BSJ-IK / 20HL-BSJ-UK

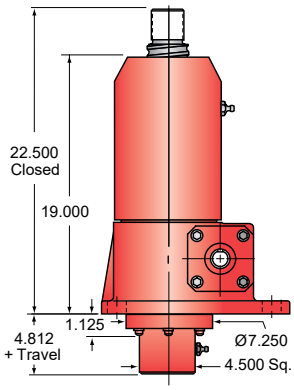

Inverted keyed models
30-BSJ-IK / 20HL-BSJ-IK

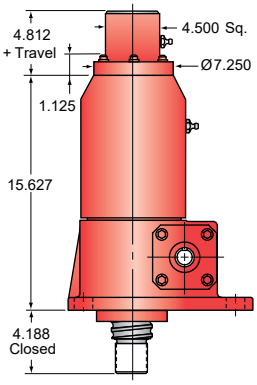

Clevis end (optional)
30-BSJ / 30HL-BSJ
p/n: 9001-00-07

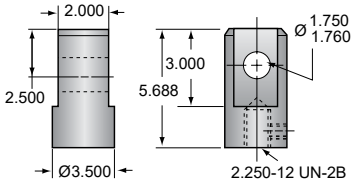

Motor mount (optional)
See page 96 - 97

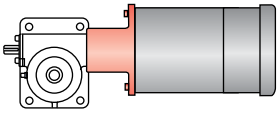

Limit switch (optional)
See page 114 - 117

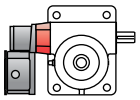

	Non-keyed			Keyed		
	Torque to raise 1 lb (in-lb)	Max. worm speed @ rated load (rpm)	Max. load @ 1750 rpm (lb)	Torque to raise 1 lb (in-lb)	Max. worm speed @ rated load (rpm)	Max. load @ 1750 rpm (lb)
	0.0162	715	24515	0.0178	649	22250
	0.0084	438	15006	0.0092	399	13680
	0.0367	315	10794	0.0404	286	9805
	0.0191	193	6600	0.0210	175	6000

Ball Screw Jacks - 50-BSJ

Top view
50-BSJ

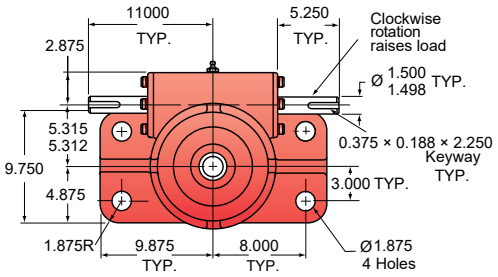

Upright models
50-BSJ-U

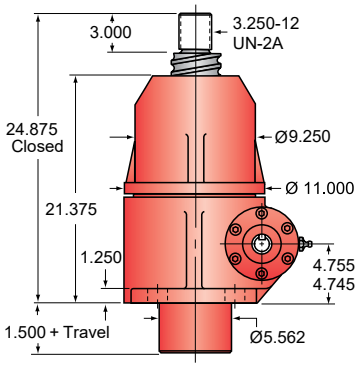

Inverted models
50-BSJ-I

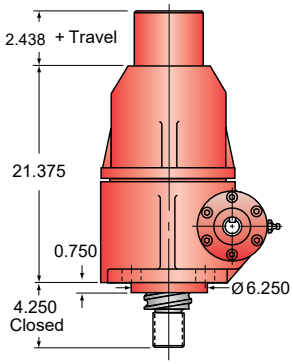

Ball nut and flange
50-BSJ

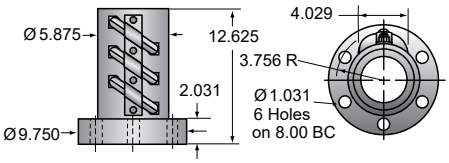

Top plate (optional)
50-BSJ
p/n: 9000-00-09

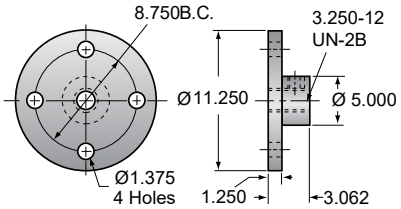

Clevis end (optional)
50-BSJ
p/n: 9001-00-09

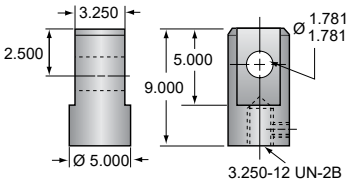

Technical Specifications

Model	Load capacity (ton)	Screw size, diam (in) × lead (in)	Gear ratio	Turns of worm for 1 in travel	Max. input torque (in-lb)	Max. allowable input (hp)	Tare drag torque (in-lb)	Backdrive holding torque @ max. load (ft-lb)	
50-BSJ	50	4.000 × 1.000	10.67:1	10.67	2560	16	90	40	
			32:1	32.00	1390	5	90	10	

Screw Specifications

Root diameter (in)	3.338
Start torque	1.5 × running torque
Approx. weight (lb) base weight per inch of travel grease	 490.0 5.0 5.0

Caution: Jack is self-lowering. Lifting screw must be secured to prevent rotation for non-keyed units.

Ball Screw Jacks - 50-BSJ

Upright rotating models[1]
50-BSJ-UR

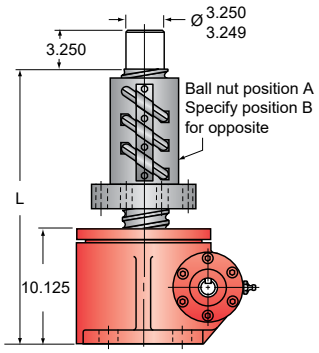

1) At order specify "L" dimension L (min) = travel + 24.50

Inverted rotating models[2]
50-BSJ-IR

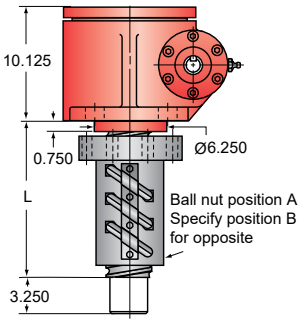

2) At order specify "L" dimension L (min) = travel + 14.38

Upright keyed models
50-BSJ-IK

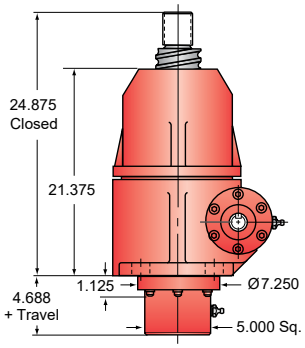

Inverted keyed models
50-BSJ-IK

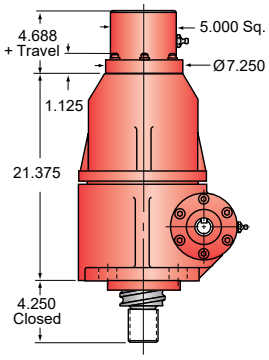

Limit switch (optional)
See page 114 - 117

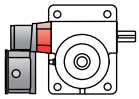

	Non-keyed			Keyed		
	Torque to raise 1 lb (in-lb)	Max. worm speed @ rated load (rpm)	Max. load @ 1750 rpm (lb)	Torque to raise 1 lb (in-lb)	Max. worm speed @ rated load (rpm)	Max. load @ 1750 rpm (lb)
	0.0256	394	22509	0.0281	359	20506
	0.0139	227	12955	0.0152	207	11847

Ball Screw Jacks - 75-BSJ

Top view
75-BSJ

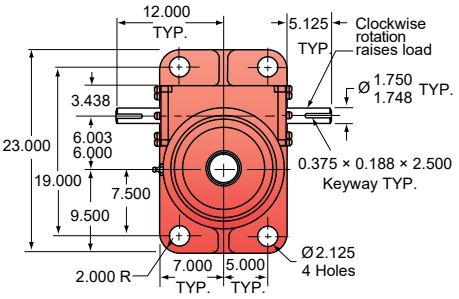

Upright models
75-BSJ-U

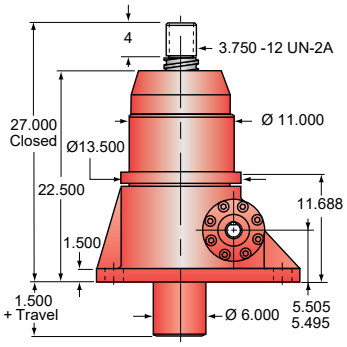

Inverted models
75-BSJ-I

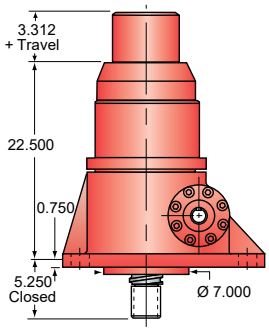

Ball nut and flange
75-BSJ

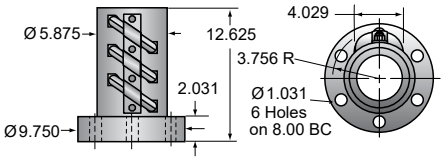

Top plate (optional)
75-BSJ
p/n: 9000-00-18

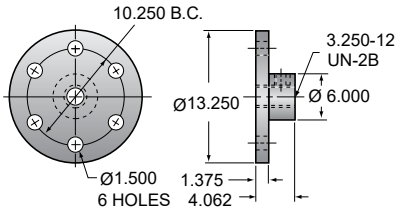

Clevis end (optional)
75-BSJ
p/n: 9001-00-18

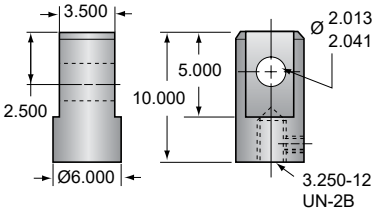

Technical Specifications

Model	Load capacity (ton)	Screw size, diam (in) × lead (in)	Gear ratio	Turns of worm for 1 in travel	Max. input torque (in-lb)	Max. allowable input (hp)	Tare drag torque (in-lb)	Backdrive holding torque @ max. load (ft-lb)
75-BSJ	75	4.000 × 1.000	10.67:1	10.66	3660	28	155	110
			32:1	32.00	1680	9	155	25

Screw Specifications

Root diameter (in)	3.338
Start torque	1.5 × running torque
Approx. weight (lb) base weight per inch of travel grease	 650.0 5.0 9.0

Caution: Jack is self-lowering. Lifting screw must be secured to prevent rotation for non-keyed units.

Ball Screw Jacks - 75-BSJ

Upright rotating models[1]
75-BSJ-UR

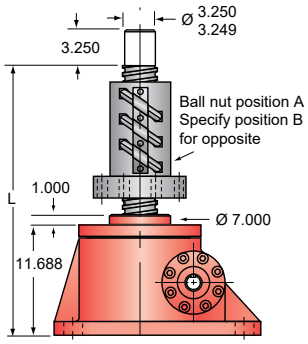

1) At order specify "L" dimension L (min) = travel + 27.31

Inverted rotating models[2]
75-BSJ-IR

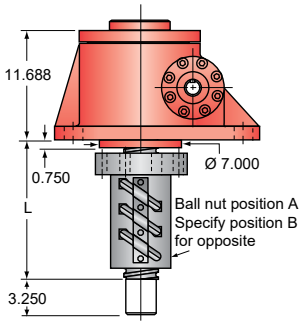

2) At order specify "L" dimension L (min) = travel + 15.38

Upright keyed models
75-BSJ-IK

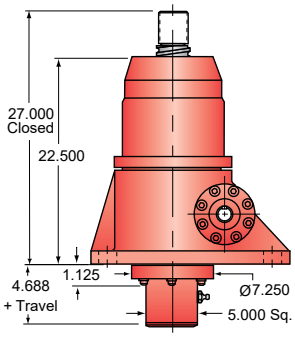

Inverted keyed models
75-BSJ-IK

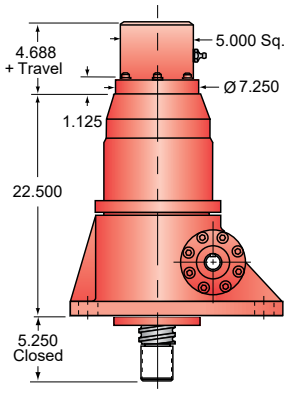

Limit switch (optional)
See page 114 - 117

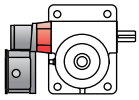

	Non-keyed			Keyed		
	Torque to raise 1 lb (in-lb)	Max. worm speed @ rated load (rpm)	Max. load @ 1750 rpm (lb)	Torque to raise 1 lb (in-lb)	Max. worm speed @ rated load (rpm)	Max. load @ 1750 rpm (lb)
	0.0244	482	41326	0.0268	439	37627
	0.0112	338	28970	0.0123	307	26352

Machine Screw Jacks

The machine screw jack incorporates an alloy steel worm gear, which drives a high-strength bronze drive sleeve. The worm gear is supported on anti-friction tapered roller bearings with external seals (sealed radial bearings on the Mini Jack and 1 ton units) provided to prevent loss of lubrication. The drive sleeve is supported on anti-friction tapered roller or ball thrust bearings. Rotation of the drive sleeve causes the acme thread lifting screw to translate or rotate, depending upon jack configuration.

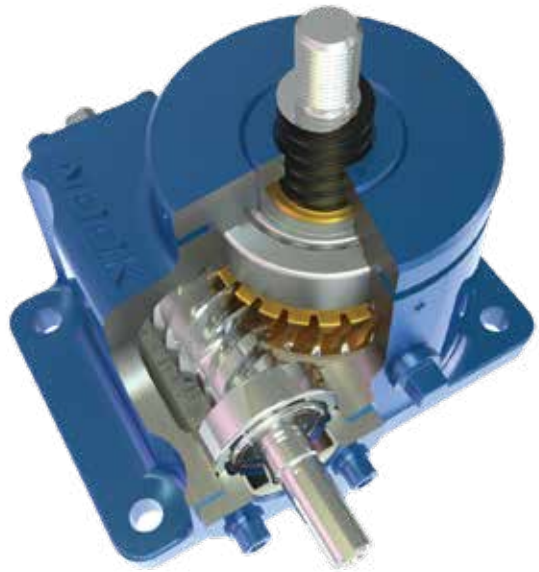

Acme Screws and Nuts

Thomson machine screw jacks are fitted with our own PowerTrac™ acme lead screws and nuts. The lifting screw is made of alloy steel with a minimum tensile strength of 95,000 psi. Thomson manufactures PowerTrac precision acme screws by thread rolling for ActionJac™ worm gear machine screw jacks, a process that produces high-precision screws typically using Class 2-C (centralizing) tolerances. Jack lift shaft lead error is approximately ±0.004 in/ft. Thomson acme screw products feature centralizing thread forms for smooth, no-wedging performance.

Straightness

PowerTrac acme lead screws are straight within 0.01 in/ft when shipped from the factory, and do not exceed 0.030 in in any six-foot section.

Material	Surface	Lead Accuracy	Screw Dia.	Screw Lengths
Alloy	black	± 0.0003 up to 1.5 in dia.	0.25 to 1.5 in	Limited only by material availability
Stainless	steel	± 0.0003 up to 1.5 in dia.	0.25 to 1.5 in	Limited only by material availability

Backlash

Backlash (lash) is the relative axial movement between a screw and nut without rotation of the screw or nut. The axial movement between a new PowerTrac acme nut and screw will range from 0.008 to 0.022 in depending on size.

Capacity

The maximum thrust load – including shock – that can be applied to the nut without damaging the assembly.

Machine Screw Jacks

Housing

The jack housing is made of ductile iron (Mini Jack models have aluminum housings) and proportioned to support the rated capacity of the unit.

Tension Load

A load that tends to "stretch" the screw. (See FIG. 1)

Compression Load

A load that tends to "squeeze" the screw. (See FIG. 1)

FIG. 1

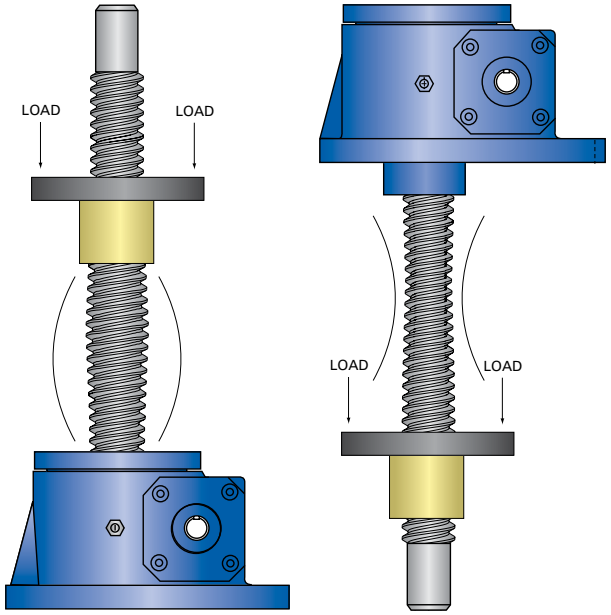

Compression Load Tension Load

Overturning Load

A load that tends to rotate the nut radially around the longitudinal axis of the screw. (See FIG. 2)

Side Load

A load that is applied radially to the nut. (See FIG. 2)

Note. Although a side load will not prevent the lead screw from operating, the nut is not designed to operate with a side load, such as those generated from pulleys, drive belts, misalignment, etc.

Thrust Load

A load parallel to and concentric with the axis of the screw. (See FIG. 2)

FIG. 2

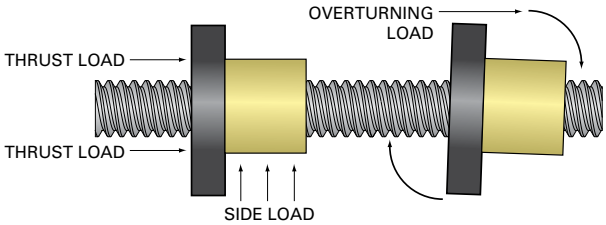

Machine Screw Jacks

Quick Reference - Mini Machine Screw Jacks

Model	Gear ratio	Capacity (ton)	Lifting screw diam. (in)	Screw lead (in)	Root diam. (in)	Turns of worm for 1in travel	Max. input torque (in.-lb.)	Max. input (hp)	Max. worm speed @ rated load (rpm)	Max. load @ 1750 rpm (lb)	Torque to raise 1 lb. (in-lb)	Lift shaft efficiency (%)	Tare drag torque (in-lb)
MJ-20	5:1	0.5	0.500	0.250	0.332	20	19	⅓	1090	631	0.019	57	-
MJ-25	5:1	0.5	0.625	0.200	0.377	25	21	⅓	1040	571	0.021	44	-
MJ-40	5:1	0.5	0.625	0.125	0.457	40	17	⅓	1260	706	0.017	34	-
MJ-50	5:1	0.5	0.500	0.100	0.359	50	14	⅓	1560	857	0.014	34	-
MJ-80	20:1	0.5	0.500	0.250	0.332	80	8	⅙	1310	750	0.008	57	-
MJ-100	20:1	0.5	0.625	0.200	0.377	100	9	⅙	1210	667	0.009	44	-
MJ-160	20:1	0.5	0.625	0.125	0.457	160	7	⅙	1500	857	0.007	34	-
MJ-200	20:1	0.5	0.500	0.100	0.359	200	6	⅙	1800	1000	0.006	34	-

Machine Screw Jacks

Quick Reference - Standard Machine Screw Jacks

Model	Gear ratio	Capacity (ton)	Lifting screw diam. (in)	Screw lead (in)	Root diam. (in)	Turns of worm for 1in travel	Max. input torque (in.-lb.)	Max. input (hp)	Max. worm speed @ rated load (rpm)	Max. load @ 1750 rpm (lb)	Torque to raise 1 lb. (in-lb)	Lift shaft efficiency (%)	Tare drag torque (in-lb)
1-MSJ	5:1	1.0	0.75	0.200	0.502	25	45	1/2	700	800	0.0225	40	3
	20:1	1.0	0.750	0.200	0.502	100	21	1/4	750	857	0.0105	40	3
2-MSJ	6:1	2.0	1.000	0.250	0.698	24	100	2	1260	2881	0.0250	38	4
	12:1	2.0	1.000	0.250	0.698	48	62	1 1/2	1525	3456	0.0154	38	4
	24:1	2.0	1.000	0.250	0.698	96	42	1/2	750	1715	0.0105	38	4
2R-MSJ	6:1	2.0	1.000	0.250	0.698	24	100	2	1260	2881	0.0250	38	4
	12:1	2.0	1.000	0.250	0.698	48	62	1 1/2	1525	3486	0.0154	38	4
	24:1	2.0	1.000	0.250	0.698	96	42	1/2	750	1715	0.0105	38	4
2.5-MSJ	6:1	2.5	1.000	0.250	0.698	24	126	2	1000	2858	0.0252	38	5
	12:1	2.5	1.000	0.250	0.698	48	74	1 1/2	1277	3650	0.0148	38	5
	24:1	2.5	1.000	0.250	0.698	96	53	1/2	594	1699	0.0106	38	5
5-MSJ	6:1	5.0	1.500	0.375	1.066	16	376	3	500	2873	0.0376	40	10
	24:1	5.0	1.500	0.375	1.066	64	144	3/4	330	1875	0.0144	40	10
10-MSJ	8:1	10.0	2.000	0.500	1.410	16	753	5	418	4766	0.0377	40	20
	24:1	10.0	2.000	0.500	1.410	48	384	1 1/2	246	2813	0.0192	40	20
15-MSJ	8:1	15.0	2.250	0.500	1.684	16	1221	5	258	4424	0.0407	37	20
	24:1	15.0	2.250	0.500	1.684	48	654	1 1/2	144	2478	0.0218	37	20
20-MSJ	8:1	20.0	2.500	0.500	1.908	16	1740	7 1/2	272	6209	0.0435	34	40
	24:1	20.0	2.500	0.500	1.908	48	873	2 1/2	180	4130	0.0218	34	40
30-MSJ	10.67:1	30.0	3.375	0.667	2.652	16	2710	11	256	8764	0.0452	34	50
	32:1	30.0	3.375	0.667	2.652	48	1411	3 1/2	156	5364	0.0235	34	50
35-MSJ	10.67:1	35.0	3.750	0.667	3.009	16	3450	11	200	8035	0.0493	30	50
	32:1	35.0	3.750	0.667	3.009	48	1800	3 1/2	122	4904	0.0257	30	50
50-MSJ	10.67:1	50.0	4.500	0.667	3.782	16	5555	16	181	10382	0.0555	28	100
	32:1	50.0	4.500	0.667	3.782	48	3014	5	104	5982	0.0301	28	100
75-MSJ	10.67:1	75.0	5.000	0.667	4.286	16	8236	28	214	18368	0.0549	26	155
	32:1	75.0	5.000	0.667	4.286	48	3780	9	150	12862	0.0252	26	155

Machine Screw Jacks

ActionJac™ anti-backlash machine screw jacks may be ordered with worm gear sets and lift shafts specifically designed to provide 0.01 inch of travel for each revolution of the input shaft. Referred to as "numeric ratio" jack, these units are usually manually operated to precisely position machine components such as end stops or calender rolls.

These jacks can be supplied with handwheels and counters (see ActionJac accessories section) to provide immediate positional feedback to an operator. ActionJac numeric ratio anti-backlash machine screw jacks retain all the performance characteristics of standard machine screw jacks.

Quick Reference - Numeric Ratio Anti-backlash Machine Screw Jacks

Model	Gear ratio	Capacity (ton)	Lifting screw diam. (in)	Screw lead (in)	Root diam. (in)	Turns of worm for 1 in travel	Max. input torque (in.-lb.)	Max. input (hp)	Max. worm speed @ rated load (rpm)	Max. load @ 1750 rpm (lb)	Torque to raise 1 lb. (in-lb)	Tare drag torque (in-lb)
MJAB-100	20:1	0.5	0.625	0.200	0.377	100	8.7	0.17	1210	690	0.009	1.0
1AB-MJS	20:1	1.0	0.750	0.200	0.502	100	21.0	0.26	750	855	0.011	3.0
2AB-MJS	25:1	25.0	1.000	0.250	0.698	100	41.0	0.51	780	1780	0.010	4.0
2.5AB-MJS	25:1	2.5	1.000	0.250	0.698	100	51.0	0.51	625	1785	0.010	5.0
5AB-MJS	25:1	5.0	1.500	0.250	1.196	100	116.0	0.67	365	2085	0.012	10.0
10AB-MJS	25:1	10.0	2.000	0.250	1.694	100	309.0	1.38	282	3225	0.015	20.0
15AB-MJS	25:1	15.0	2.250	0.250	1.944	100	505.0	1.33	165	2835	0.017	20.0
20AB-MJS	25:1	20.0	2.500	0.250	2.193	100	712.0	2.32	205	4690	0.018	40.0

Machine Screw Jacks

Notes:

1. The recommended maximum speed is 1,800 rpm provided that the recommended horsepower and temperature are not exceeded.
2. Input torque is shown as torque to lift one pound of load. Starting torque is 100% greater than torque shown. For loads less than 25% of rated loads, add tare drag torque.
3. Maximum allowable horsepower ratings are based on a 25% duty cycle at standard ambient temperature, with 1 minute on / 3 minute off cycles. For operation at higher duty cycles or repeated use over any segment of the total travel, temperature must be monitored and remain less than 200°F.
4. Overload capacity of the machine screw jack is as follows: 10% for dynamic loads, 30% for static loads.
5. Machine screw jacks with gear ratios between 20:1 and 32:1, or where the lift shaft efficiency is less than 35%, may be considered self-locking and will hold loads without backdriving in the absence of vibration. All other ratios and lift shaft efficiencies may require a brake to prevent backdriving.

   Note: Vibration can cause any jack assembly to creep or backdrive. When using any jack assembly, applications should be analyzed to determine the necessity of a brake, especially when the possibility of injury may occur.
6. All units are suitable for intermittent operation providing that the housing temperature including ambient is not lower than -20°F or higher than +200°F. Factory supplied grease in standard units will operate in this range. For higher or lower operating temperature ranges, consult Thomson.
7. Accessories such as boots, limit switches, top plates and clevises are available.
8. Catalog dimensions are representative only and are subject to change without notice. For construction, use only certified prints.
9. Units are not to be used as personnel support or movement.
10. End-of-travel stops are not provided.
11. Tare drag torque need only be added if operating under 25% rated load.
12. Starting torque is 100% greater than torque shown.
13. Measurements listed are for non-keyed jacks. See individual jack pages for keyed jack info.

Machine Screw Jacks

Column Strength

Column strength is the ability of the lift shaft to hold compressive loads without buckling. With longer screw lengths, column strength may be substantially lower than nominal jack capacity. If the lift shaft is in tension only, the screw jack travel is limited by the available screw material or by the critical speed of the screw. If there is any possibility for the lift shaft to go into compression, the application should be sized for sufficient column strength.

The chart below is used to determine the required jack size in applications where the lift shaft is loaded in compression.

Available Lift Screw Lengths

Thomson has the capacity to make long acme screws for special applications. Rotating screw jacks can be built with a larger diameter lift screw for greater column strength, or a different lead to change the jack operating speed.

To Use This Chart

Find a point at which the maximum length "L" intersects the maximum load. Be sure the jack selected is above and to the right of that point.

Note: chart does not include a design factor. The chart assumes proper jack alignment with no bending loads on the screw. Effects from side loading are not included in this chart. Jacks operating horizontally with long lift shafts can experience bending from the weight of the screw.

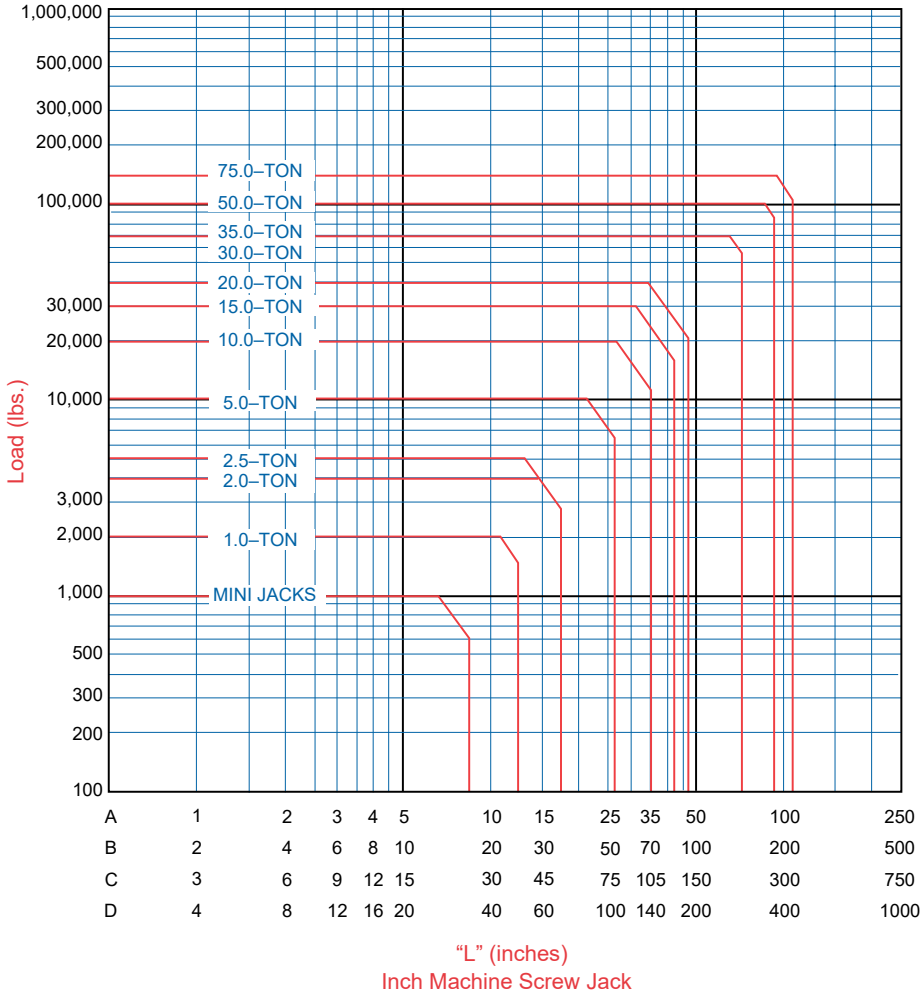

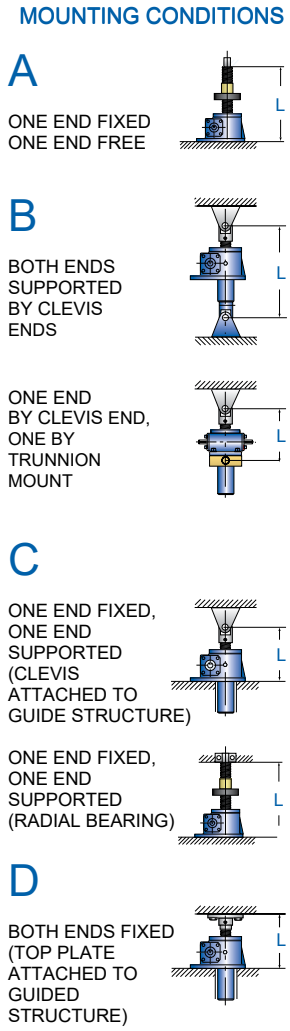

Machine Screw Jacks

Ordering Key

1	2	3		4		5		6	7		8		9
2.5-MSJ-	**U**	**6:1**	**/**	**SSE-1**	**/**	**2CA-4C**	**/**	**F**	**T**	**/**	**24.5**	**/**	**BS**

1. Machine screw model

MJ-20	1-MSJ	1AB-MSJ
MJ-25	2-MSJ	2AB-MSJ
MJ-40	2R-MSJ	2RAB-MSJ
MJ-80	2.5-MSJ	2.5AB-MSJ
MJ-100	5-MSJ	5AB-MSJ
MJ-160	10-MSJ	10AB-MSJ
MJ-200	15-MSJ	15AB-MSJ
	20-MSJ	20AB-MSJ
	30-MSJ	30AB-MSJ
	35-MSJ	35AB-MSJ
	50-MSJ	50AB-MSJ
	75-MSJ	75AB-MSJ

2. Configuration
U = upright
I = inverted
UR = upright rotating
IR = inverted rotating
DC = double clevis
UK = upright keyed
IK = inverted keyed

3. Gear ratio
See product pages for available gear ratios

4 and 5 Shaft order code
A position note must be included.
Both shaft extensions must be specified.

10LT - 1 — CCW position 1, 3, 5 and 7
CW position 2, 4, 6 and 8

No accessory (position 1 or 2)
SSE = Standard shaft extension
000 = Delete shaft extension
SPC = Special modofied shaft extension

With motor mounts without motor (position 1 or 2)
Used on 2.5 - 20 ton jacks. See pages 96 - 97.

With motor mounts with motor (position 1 or 2)
Used on 2.5 - 20 ton jacks. See page 104.

Right angle reducers position 1 - 8
Used on 2.5 - 20 ton jacks. See pages 98 - 99.

Limit switches position position 1C or E through 8C or E
Used on 2 - 75 ton jacks. See pages 114 - 117.

Hand wheels
Used on MJ to 20 ton jacks. See page 122.

Counters
Used on MJ to 20 ton jacks. See page 118.

6. Housing configuration
F = standard flange base
C = clevis base

7. Screw configuration
Translating models (U and I configurations)
T = standard threaded end
C = clevis end
P = top plate
Rotating models (UR and IR configurations)
A = travel nut position "A"
B = travel nut position "B"

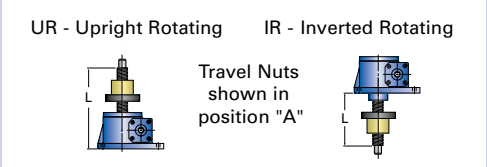

8. Travel
Translating models (U and I configurations)
Use actual travel in inches.

Rotating models (UR and IR configurations)
Use "L" dimension in inches.

98. Modifier list
Optional codes
E = in-line encoder (motor or motor mount required)
B = bellows boots (se page 123. Must calculate extend and retract length)
P = tube sensor system PNP
N = tube sensor system NPN

Required codes
S = standard (no additional description required)
M = modified (additional description required)

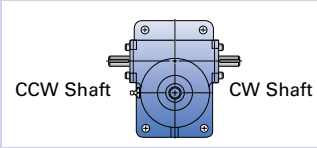

Machine Screw Jacks - Mini Series

Top view
MJ-xxx

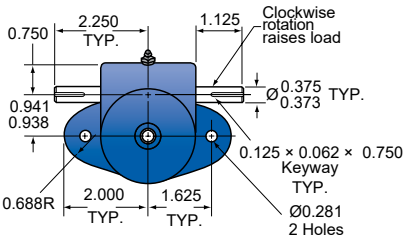

Upright models
MJ-xxxU

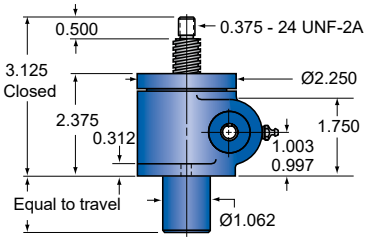

Inverted models
MJ-xxxI

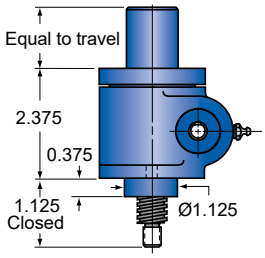

Uprigt anti-backlash models
MJAB-xxx-U

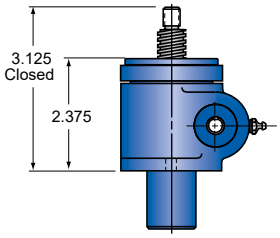

Inverted anti-backlash models
MJAB-xxx-I

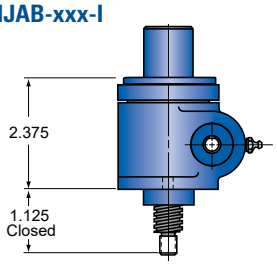

Acme nut and flange
MJ-xxx / MJAB-xxx

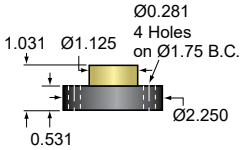

Technical Specifications

Model	Gear ratio	Turns of worm for 1 in travel	Torque @ 1000 lb (in-lb)	Max. allowable input (hp)	Screw size [3] (diameter (in) - turns per 1 inch travel)	
MJ-20	5:1	20	19.3	1/3	1/2-4	
MJ-25	5:1	25	20.7	1/3	5/8-5	
MJ-40	5:1	40	16.7	1/3	5/8-8	
MJ-50	5:1	50	13.5	1/3	1/2-10	
MJ-80	20:1	80	8.0	1/6	1/2-4	
MJ-100	20:1	100	8.7	1/6	5/8-5	
MJ-160	20:1	160	7.0	1/6	5/8-8	
MJ-200	20:1	200	5.7	1/6	1/2-10	

Screw Specifications

Start torque	2 × running torque
Approx. weight (lb)	
base weight	2.5
per inch of travel	0.2
grease	0.5

Caution: Jack may be self-lowering in some operating conditions. Lifting screw must be secured to prevent rotation for non-keyed units.

Machine Screw Jacks - Mini Series

Upright rotating models[1]
MJ-xxxUR

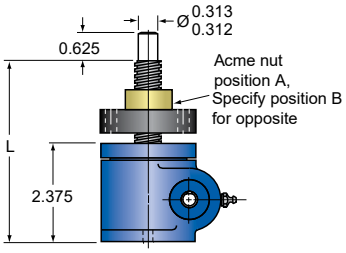

1) At order specify "L" dimension L (min) = travel + 3.66

Inverted rotating models[2]
MJ-xxxIR

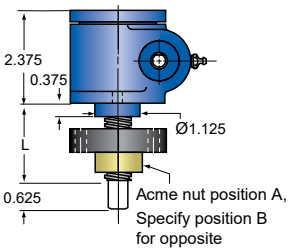

2) At order specify "L" dimension L (min) = travel + 1.66

Upright keyed models
MJ-xxxUK

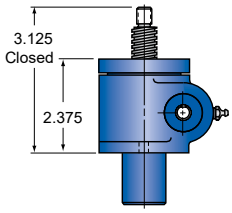

Inverted keyed models
MJ-xxxIK

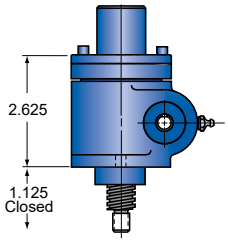

Top plate (optional)
MJ-xxx / MJAB-xxx
p/n: 9000-00-12

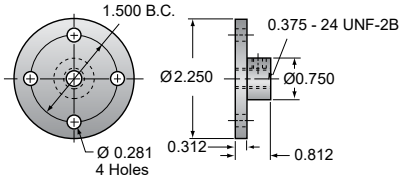

Clevis end (optional)
MJ-xxx / MJAB-xxx
p/n: 9001-00-12

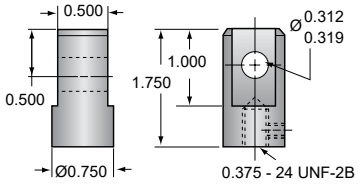

	Ratings @ 1750 rpm		Max. travel @ compression load [4] (in)		Non-keyed		Keyed	
	Max. load (lbs)	Lift speed [in/min)	@ 1000 lbs	@ any load	Torque to raise 1 lb (in-lb)	Max. speed @ 1000 lbs load (rpm)	Torque to raise 1 lb (in-lb)	Max. worm speed @ rated load (rpm)
	631	90.0	7.20	8.75	0.019	1090	0.022	950
	571	72.0	8.30	9.38	0.021	1040	0.024	900
	706	45.0	11.88	11.88	0.017	1260	0.020	1100
	857	46.0	8.30	9.38	0.014	1560	0.016	1350
	750	22.5	7.20	8.75	0.008	1310	0.009	1140
	667	18.0	8.30	9.38	0.009	1210	0.010	1050
	857	11.2	11.88	11.11	0.007	1500	0.008	1300
	1000	9.0	8.30	9.38	0.006	1800	0.007	1560

3) Lift shafts are made from 300 series stainless steel material except for 5/8-5.

4) Travel is based on one end fixed and the other end free. See page 54 for other mounting considerations.

Machine Screw Jacks - 1-MSJ / 1AB-MSJ

Top view
1-MSJ / 1AB-MSJ

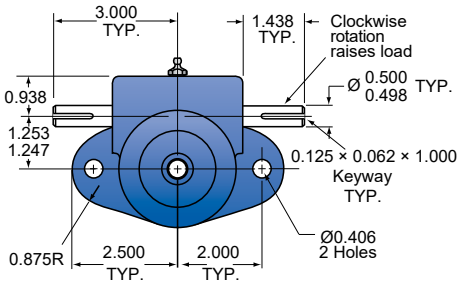

Upright models
1-MSJ-U

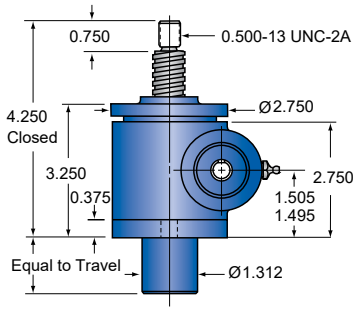

Inverted models
1-MSJ-I

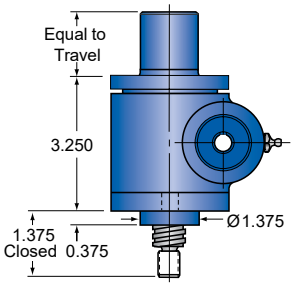

Upright ant-backlash models
1AB-MSJ-U

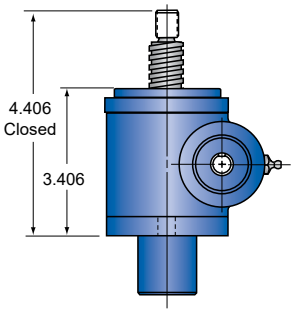

Inverted ant-backlash models
1AB-MSJ-I

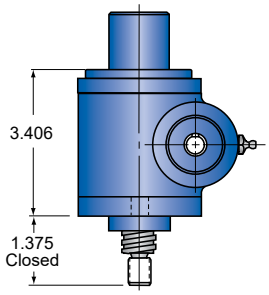

Double clevis models
1-MSJ-DC

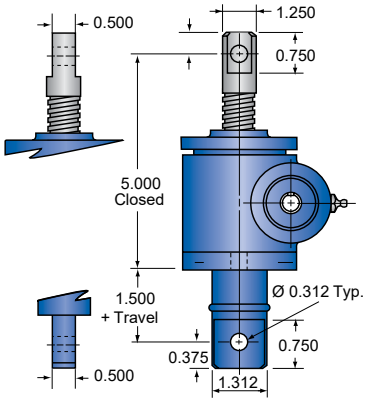

Technical Specifications

Model	Load capacity (ton)	Screw size, (diameter (in) - turns per 1 inch travel)	Gear ratio	Turns of worm for 1 in travel	Max. input torque (in-lb)	Max. allowable input (hp)	Tare drag torque (in-lb)	
1-MSJ, 1AB-MSJ	1	0.75 - 5	5:1	25	45	½	3	
			20:1	100	21	¼	3	

Screw Specifications

Root diameter (in)	0.502
Screw lead (in)	0.200
Start torque	2 × running torque
Approx. weight (lb) base weight per inch of travel grease	 5.5 0.3 0.5

Caution: Jack may be self-lowering in some operating conditions. Lifting screw must be secured to prevent rotation for non-keyed units.

Machine Screw Jacks - 1-MSJ / 1AB-MSJ

Upright rotating models[1]
1-MSJ-UR

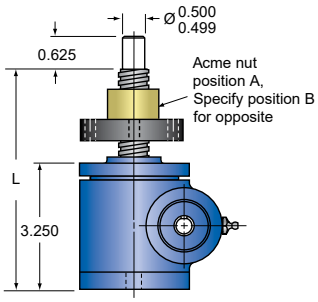

1) At order specify "L" dimension L (min) = travel + 5.03

Inverted rotating models[2]
1-MSJ-IR

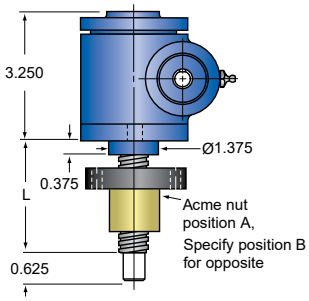

2) At order specify "L" dimension L (min) = travel + 2.16

Upright keyed models
1-MSJ-UK

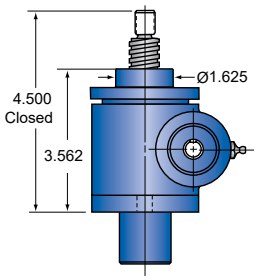

Inverted keyed models
1-MSJ-IK

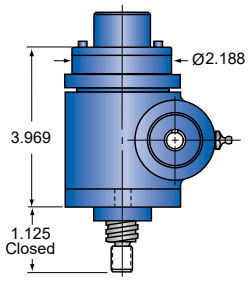

Acme nut and flange
1-MSJ / 1AB-MSJ

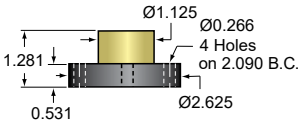

Top plate (optional)
1-MSJ / 1AB-MSJ

p/n: 9000-00-11

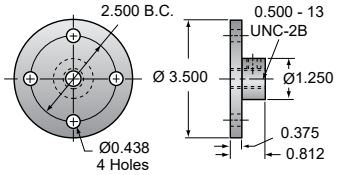

Clevis end (optional)
1-MSJ / 1AB-MSJ

p/n: 9001-00-11

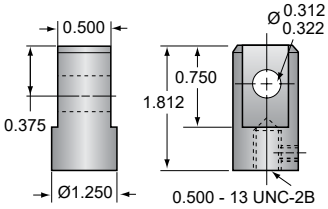

	Non-keyed			Keyed		
	Torque to raise 1 lb (in-lb)	Max. worm speed @ rated load (rpm)	Max. load @ 1750 rpm (lb)	Torque to raise 1 lb (in-lb)	Max. worm speed @ rated load (rpm)	Max. load @ 1750 rpm (lb)
	0.0225	700	800	0.0259	608	695
	0.0105	750	857	0.0121	651	744

Machine Screw Jacks - 2-MSJ / 2AB-MSJ

Top view
2-MSJ / 2AB-MSJ

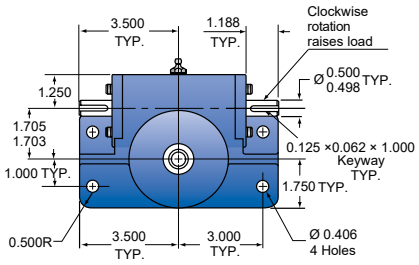

Upright models
2-MSJ-U

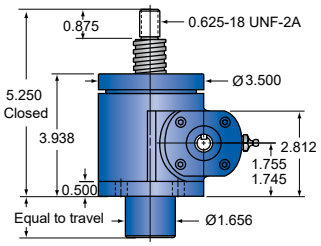

Inverted models
2-MSJ-I

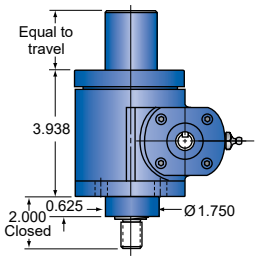

Upright ant-backlash models
2AB-MSJ-U

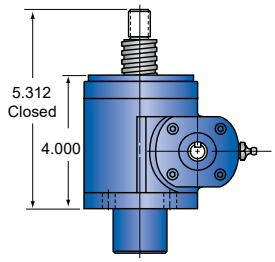

Inverted ant-backlash models
2AB-MSJ-I

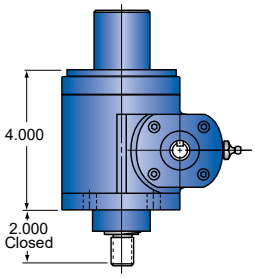

Double clevis models
2-MSJ-DC

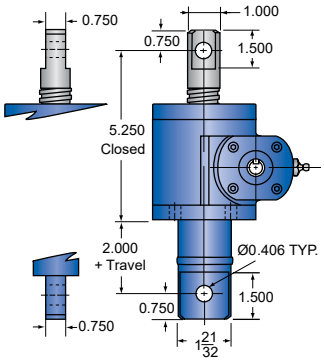

Technical Specifications

Model	Load capacity (ton)	Screw size, (diameter (in) - turns per 1 inch travel)	Gear ratio	Turns of worm for 1 in travel	Max. input torque (in-lb)	Max. allowable input (hp)	Tare drag torque (in-lb)
2-MSJ. 2AB-MSJ	2	1 - 4	6:1	24	100	2	4
			12:1	48	62	½	4
			24:1	96	42	½	4

Screw Specifications

Root diameter (in)	0.698
Screw lead (in)	0.250
Start torque	2 × running torque
Approx. weight (lb) base weight per inch of travel grease	 15.00 0.45 0.50

Caution: Jack may be self-lowering in some operating conditions. Lifting screw must be secured to prevent rotation for non-keyed units.

Machine Screw Jacks - 2-MSJ / 2AB-MSJ

Upright rotating models[1]
2-MSJ-UR

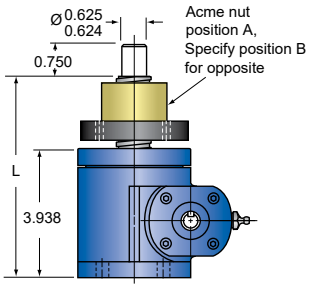

1) At order specify "L" dimension L (min) = travel + 6.938

Inverted rotating models[2]
2-MSJ-IR

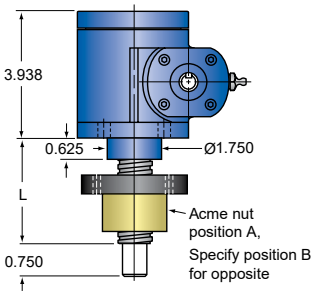

2) At order specify "L" dimension L (min) = travel + 3.625

Upright keyed models
2-MSJ-UK

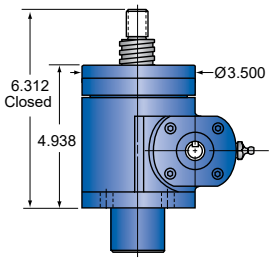

Inverted keyed models
2-MSJ-IK

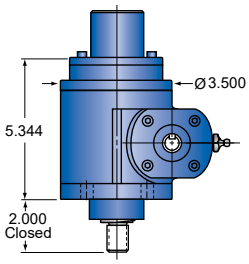

Acme nut and flange
2-MSJ / 2AB-MSJ

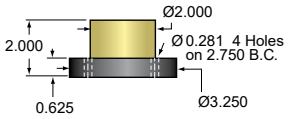

Top plate (optional)
2-MSJ / 2AB-MSJ

p/n: 9000-00-01

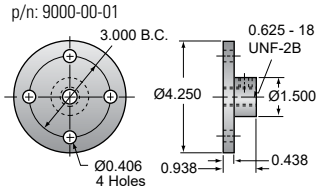

Clevis end (optional)
2-MSJ / 2AB-MSJ

p/n: 9001-00-01

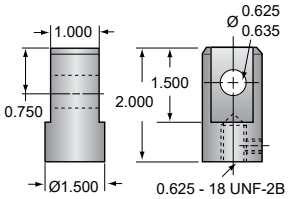

Motor mount (optional)

See page 96 - 97

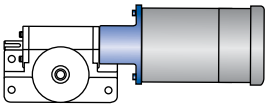

Limit switch (optional)

See page 114 - 117

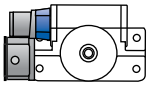

	Non-keyed			Keyed		
	Torque to raise 1 lb (in-lb)	Max. worm speed @ rated load (rpm)	Max. load @ 1750 rpm (lb)	Torque to raise 1 lb (in-lb)	Max. worm speed @ rated load (rpm)	Max. load @ 1750 rpm (lb)
	0.0250	1260	2881	0.0288	1096	2505
	0.0154	1525	3486	0.0177	1326	3031
	0.0105	750	1715	0.0121	651	1488

Machine Screw Jacks - 2R-MSJ / 2RAB-MSJ

Top view
2R-MSJ / 2AB-MSJ

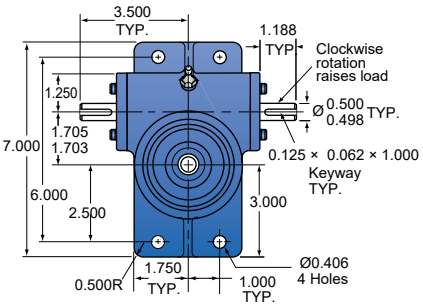

Upright models
2R-MSJ-U

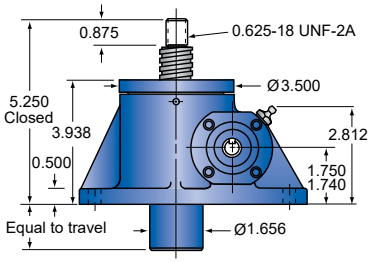

Inverted models
2R-MSJ-I

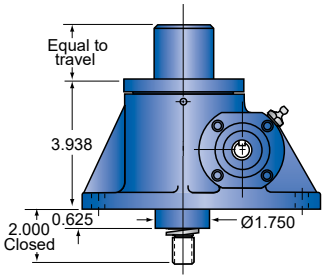

Upright ant-backlash models
2RAB-MSJ-U

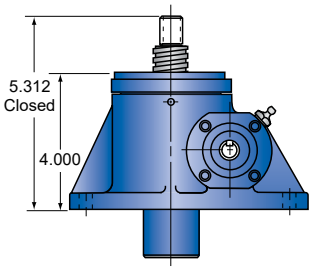

Inverted ant-backlash models
2RAB-MSJ-I

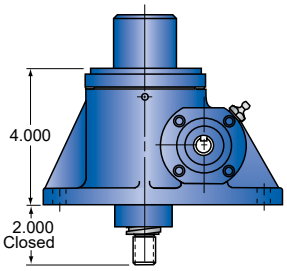

Double clevis models
2R-MSJ-DC

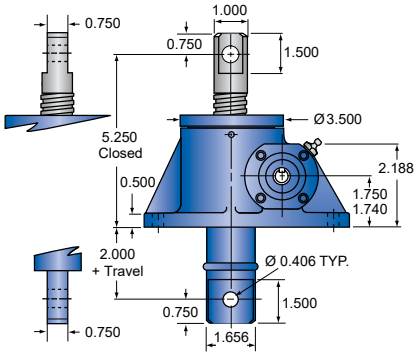

Technical Specifications

Model	Load capacity (ton)	Screw size, (diameter (in) - turns per 1 inch travel)	Gear ratio	Turns of worm for 1 in travel	Max. input torque (in-lb)	Max. allowable input (hp)	Tare drag torque (in-lb)
2R-MSJ, 2RAB-MSJ	2	1-4	6:1	24	100	2	4
			12:1	48	62	½	4
			24:1	96	42	½	4

Screw Specifications

Root diameter (in)	0.698
Screw lead (in)	0.250
Start torque	2 × running torque
Approx. weight (lb) base weight per inch of travel grease	 15.00 0.45 0.50

Caution: Jack may be self-lowering in some operating conditions. Lifting screw must be secured to prevent rotation for non-keyed units.

Machine Screw Jacks - 2R-MSJ / 2RAB-MSJ

Upright rotating models[1]
2R-MSJ-UR

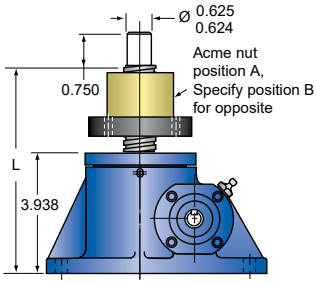

1) At order specify "L" dimension L (min) = travel + 6.94

Inverted rotating models[2]
2R-MSJ-IR

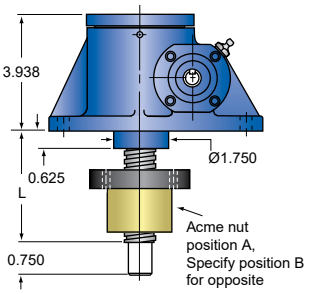

2) At order specify "L" dimension L (min) = travel + 3.62

Upright keyed models
2R-MSJ-UK

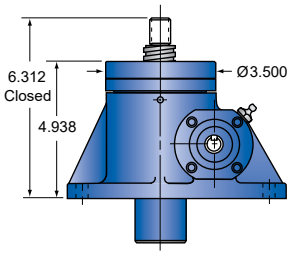

Inverted keyed models
2R-MSJ-IK

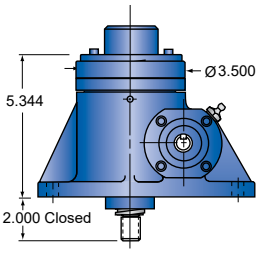

Acme nut and flange
2R-MSJ / 2RAB-MSJ

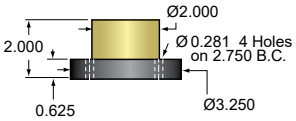

Top plate (optional)
2R-MSJ / 2RAB-MSJ
p/n: 9000-00-01

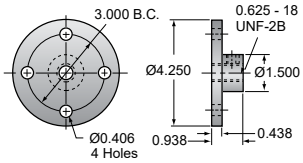

Clevis end (optional)
2R-MSJ / 2RAB-MSJ
p/n: 9001-00-01

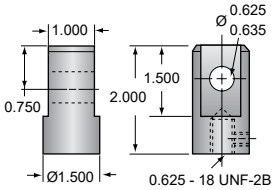

Motor mount (optional)
See page 96 - 97

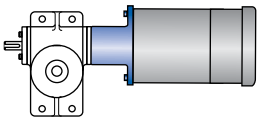

Limit switch (optional)
See page 114 - 117

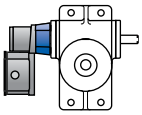

	Non-keyed			Keyed		
	Torque to raise 1 lb (in-lb)	Max. worm speed @ rated load (rpm)	Max. load @ 1750 rpm (lb)	Torque to raise 1 lb (in-lb)	Max. worm speed @ rated load (rpm)	Max. load @ 1750 rpm (lb)
	0.0250	1260	2881	0.0288	1096	2505
	0.0154	1525	3486	0.0177	1326	3031
	0.0105	750	1715	0.0121	651	1488

Machine Screw Jacks - 2.5-MSJ / 2.5AB-MSJ

Top view
2.5-MSJ / 2.5AB-MSJ

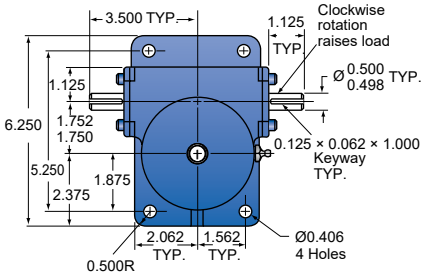

Upright models
2.5-MSJ-U

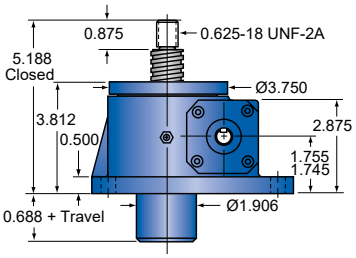

Inverted models
2.5-MSJ-I

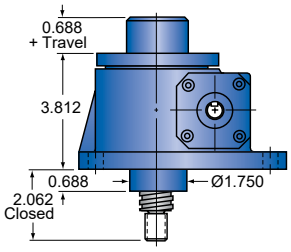

Upright ant-backlash models
2.5AB-MSJ-U

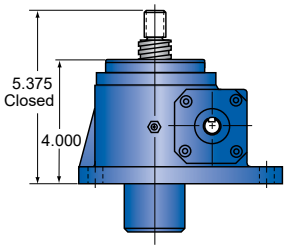

Inverted ant-backlash models
2.5AB-MSJ-I

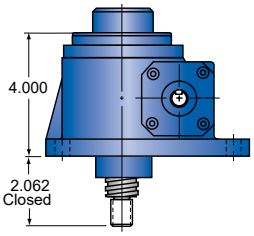

Double clevis models
2.5-MSJ-DC

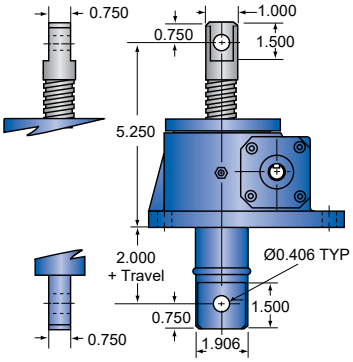

Technical Specifications

Model	Load capacity (ton)	Screw size, (diameter (in) - turns per 1 inch travel)	Gear ratio	Turns of worm for 1 in travel	Max. input torque (in-lb)	Max. allowable input (hp)	Tare drag torque (in-lb)
2.5-MSJ 2.5AB-MSJ	2.5	1-4	6:1	24	126	2	5
			12:1	48	74	1½	5
			24:1	96	53	½	5

Screw Specifications

Root diameter (in)	0.698
Screw lead (in)	0.250
Start torque	2 × running torque
Approx. weight (lb) base weight per inch of travel grease	 17.00 0.45 0.50

Caution: Jack may be self-lowering in some operating conditions. Lifting screw must be secured to prevent rotation for non-keyed units.

Machine Screw Jacks - 2.5-MSJ / 2.5AB-MSJ

Upright rotating models[1]
2.5-MSJ-UR

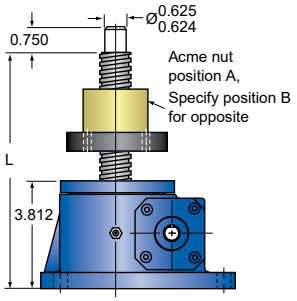

1) At order specify "L" dimension L (min) = travel + 6.81

Inverted rotating models[2]
2.5-MSJ-IR

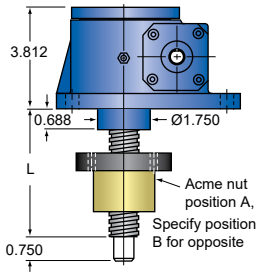

2) At order specify "L" dimension L (min) = travel + 3.69

Upright keyed models
2.5-MSJ-UK

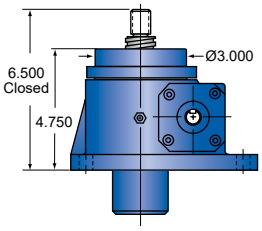

Inverted keyed models
2.5-MSJ-IK

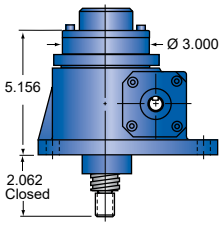

Acme nut and flange
2.5-MSJ / 2.5AB-MSJ

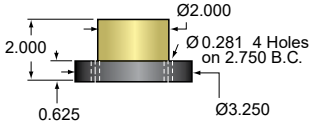

Top plate (optional)
2.5-MSJ / 2.5AB-MSJ
p/n: 9000-00-01

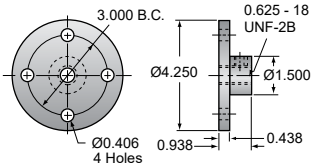

Clevis end (optional)
2.5-MSJ / 2.5AB-MSJ
p/n: 9001-00-01

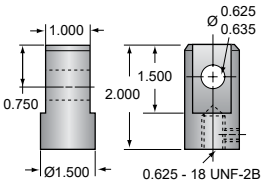

Motor mount (optional)
See page 96 - 97

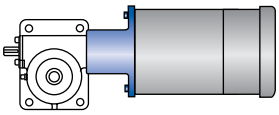

Secondary reducer (optional)
See page 98 - 103

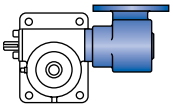

Limit switch (optional)
See page 114 - 117

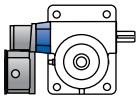

	Non-keyed			Keyed		
	Torque to raise 1 lb (in-lb)	Max. worm speed @ rated load (rpm)	Max. load @ 1750 rpm (lb)	Torque to raise 1 lb (in-lb)	Max. worm speed @ rated load (rpm)	Max. load @ 1750 rpm (lb)
	0.0252	1000	2858	0.0290	869	2483
	0.0148	1277	3650	0.0170	1110	3174
	0.0106	594	1699	0.0122	516	1476

Machine Screw Jacks - 5-MSJ / 5AB-MSJ

Top view
5-MSJ / 5AB-MSJ

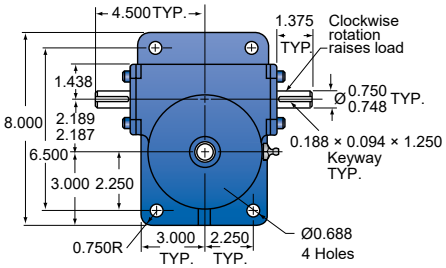

Upright models
5-MSJ-U

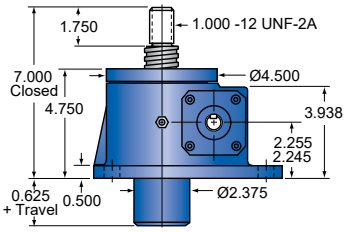

Inverted models
5-MSJ-I

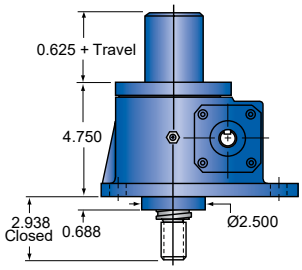

Upright ant-backlash models
5AB-MSJ-U

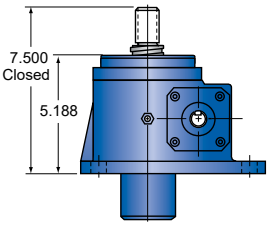

Inverted ant-backlash models
5AB-MSJ-I

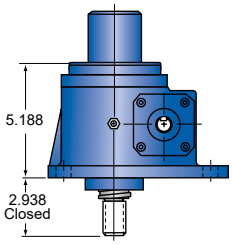

Double clevis models
5-MSJ-DC

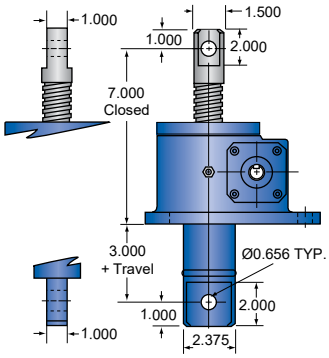

Technical Specifications

Model	Load capacity (ton)	Screw size, (diameter (in) - turns per 1 inch travel)	Gear ratio	Turns of worm for 1 in travel	Max. input torque (in-lb)	Max. allowable input (hp)	Tare drag torque (in-lb)	
5-MSJ, 5AB-MSJ	5	1.5-7.33	6:1	16	376	3	10	
			24:1	64	144	3⁄4	10	

Screw Specifications

Root diameter (in)	1.066
Screw lead (in)	0.375
Start torque	2 × running torque
Approx. weight (lb) base weight per inch of travel grease	 30.0 0.7 1.0

Caution: Jack may be self-lowering in some operating conditions. Lifting screw must be secured to prevent rotation for non-keyed units.

Machine Screw Jacks - 5-MSJ / 5AB-MSJ

Upright rotating models[1]
5-MSJ-UR

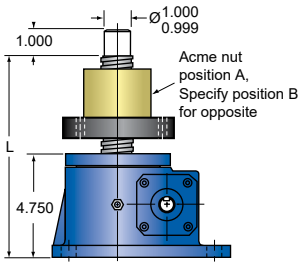

1) At order specify "L" dimension L (min) = travel + 8.75

Inverted rotating models[2]
5-MSJ-IR

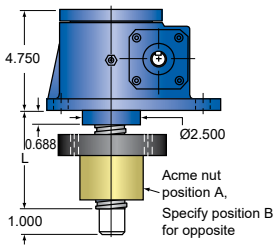

2) At order specify "L" dimension L (min) = travel + 4.69

Upright keyed models
5-MSJ-UK

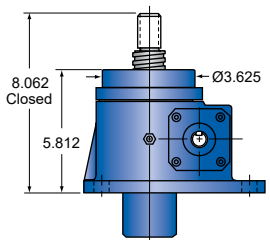

Inverted keyed models
5-MSJ-IK

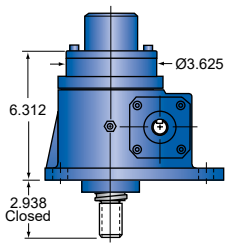

Acme nut and flange
5-MSJ / 5AB-MSJ

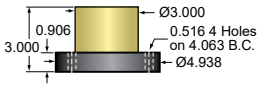

Top plate (optional)
5-MSJ / 5AB-MSJ
p/n: 9000-00-02

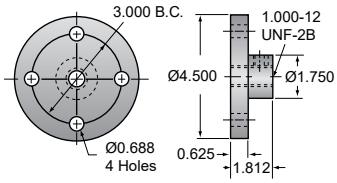

Clevis end (optional)
5-MSJ / 5AB-MSJ
p/n: 9001-00-02

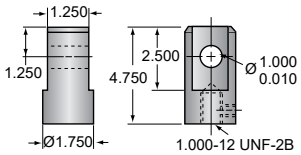

Motor mount (optional)
See page 96 - 97

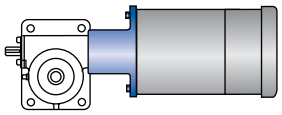

Secondary reducer (optional)
See page 98 - 103

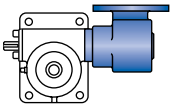

Limit switch (optional)
See page 114 - 117

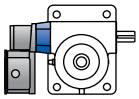

	Non-keyed			Keyed		
	Torque to raise 1 lb (in-lb)	Max. worm speed @ rated load (rpm)	Max. load @ 1750 rpm (lb)	Torque to raise 1 lb (in-lb)	Max. worm speed @ rated load (rpm)	Max. load @ 1750 rpm (lb)
	0.0376	500	2873	0.0432	437	2501
	0.0144	330	1875	0.0166	287	1627

Machine Screw Jacks - 10-MSJ / 10AB-MSJ

Top view
10-MSJ / 5AB-MSJ

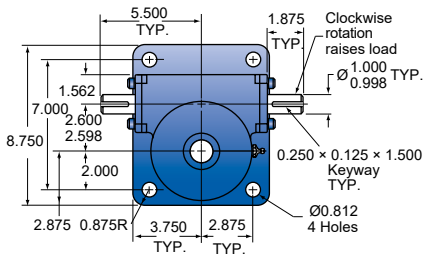

Upright models
10-MSJ-U

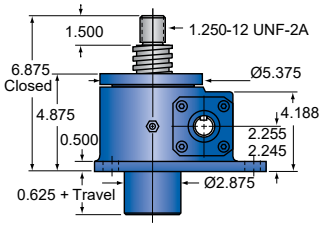

Inverted models
10-MSJ-I

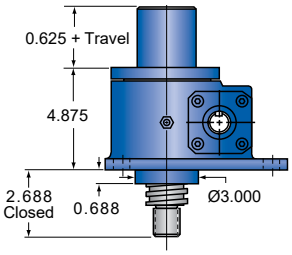

Upright ant-backlash models
10AB-MSJ-U

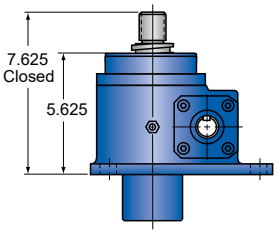

Inverted ant-backlash models
10AB-MSJ-I

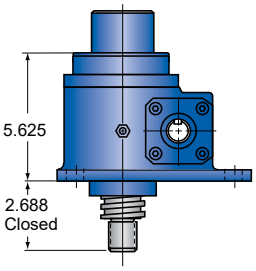

Double clevis models
10-MSJ-DC

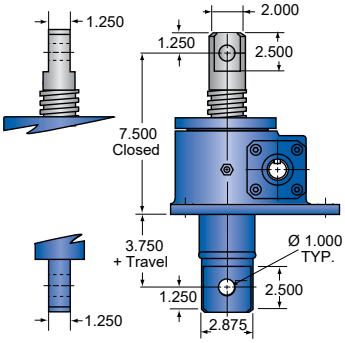

Technical Specifications

Model	Load capacity (ton)	Screw size, (diameter (in) - turns per 1 inch travel)	Gear ratio	Turns of worm for 1 in travel	Max. input torque (in-lb)	Max. allowable input (hp)	Tare drag torque (in-lb)	
10-MSJ, 10AB-MSJ	10	2 - 2	8:1	16	753	5	20	
			24:1	48	384	11⁄2	20	

Screw Specifications

Root diameter (in)	1.410
Screw lead (in)	0.5
Start torque	2 × running torque
Approx. weight (lb) base weight per inch of travel grease	 45.0 1.2 1.5

Caution: Jack may be self-lowering in some operating conditions. Lifting screw must be secured to prevent rotation for non-keyed units.

Machine Screw Jacks - 10-MSJ / 10AB-MSJ

Upright rotating models[1]
10-MSJ-UR

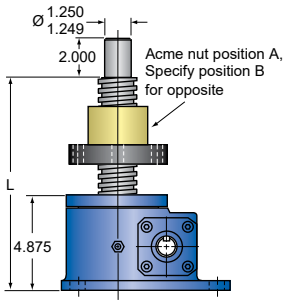

1) At order specify "L" dimension L (min) = travel + 8.88

Inverted rotating models[2]
10-MSJ-IR

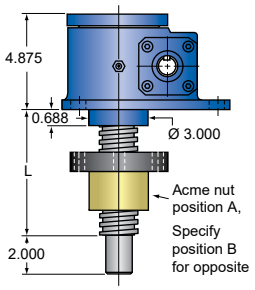

2) At order specify "L" dimension L (min) = travel + 4.69

Upright keyed models
10-MSJ-UK

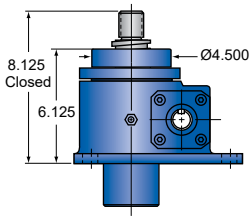

Inverted keyed models
10-MSJ-IK

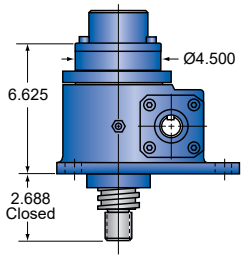

Acme nut and flange
10-MSJ / 10AB-MSJ

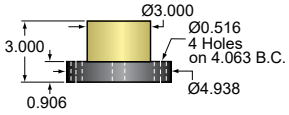

Top plate (optional)
10-MSJ / 10AB-MSJ
p/n: 9000-00-03

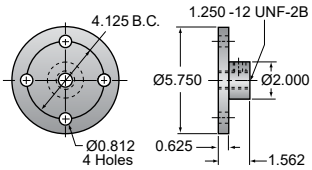

Clevis end (optional)
10-MSJ / 10AB-MSJ
p/n: 9001-00-03

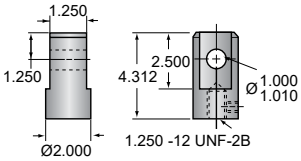

Motor mount (optional)
See page 96 - 97

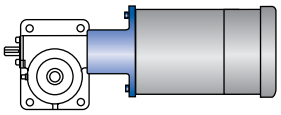

Secondary reducer (optional)
See page 98 - 103

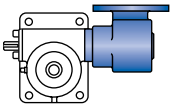

Limit switch (optional)
See page 114 - 117

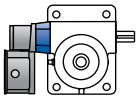

	Non-keyed			Keyed		
	Torque to raise 1 lb (in-lb)	Max. worm speed @ rated load (rpm)	Max. load @ 1750 rpm (lb)	Torque to raise 1 lb (in-lb)	Max. worm speed @ rated load (rpm)	Max. load @ 1750 rpm (lb)
	0.0377	418	4776	0.0434	363	4149
	0.0192	246	2813	0.0221	214	2444

Machine Screw Jacks - 15-MSJ / 15AB-MSJ

Top view
15-MSJ / 5AB-MSJ

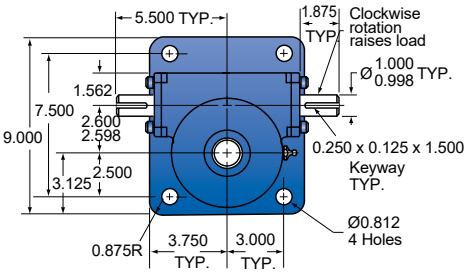

Upright models
15-MSJ-U

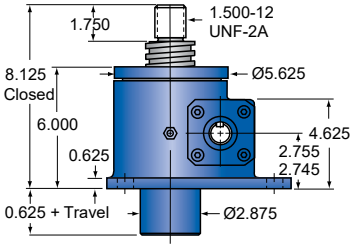

Inverted models
15-MSJ-I

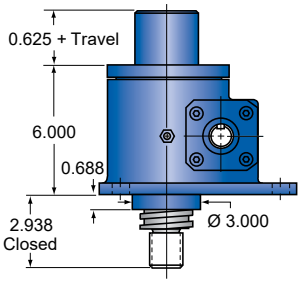

Upright ant-backlash models
15AB-MSJ-U

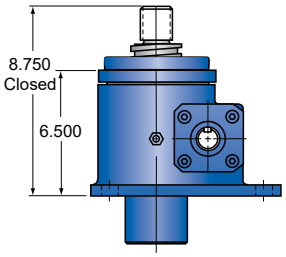

Inverted ant-backlash models
15AB-MSJ-I

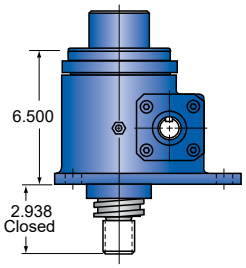

Double clevis models
15-MSJ-DC

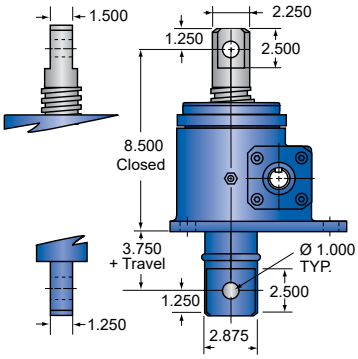

Technical Specifications

Model	Load capacity (ton)	Screw size, (diameter (in) - turns per 1 inch travel)	Gear ratio	Turns of worm for 1 in travel	Max. input torque (in-lb)	Max. allowable input (hp)	Tare drag torque (in-lb)
15-MSJ, 15AB-MSJ	15	2.25 - 2	8:1	16	1221	5	20
			24:1	48	654	11⁄2	20

Screw Specifications

Root diameter (in)	1.684
Screw lead (in)	0.5
Start torque	2 × running torque
Approx. weight (lb) base weight per inch of travel grease	 55.0 1.4 1.5

Caution: Jack may be self-lowering in some operating conditions. Lifting screw must be secured to prevent rotation for non-keyed units.

Machine Screw Jacks - 15-MSJ / 15AB-MSJ

Upright rotating models[1]
15-MSJ-UR

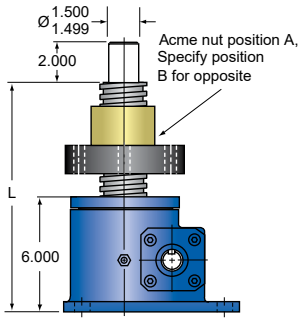

1) At order specify "L" dimension L (min) = travel + 10.50

Inverted rotating models[2]
15-MSJ-IR

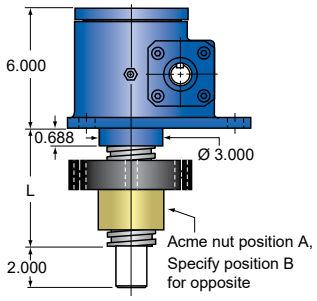

2) At order specify "L" dimension L (min) = travel + 5.19

Upright keyed models
15-MSJ-UK

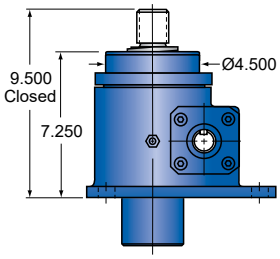

Inverted keyed models
15-MSJ-IK

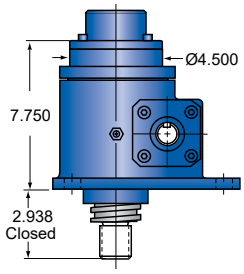

Acme nut and flange
15-MSJ / 15AB-MSJ

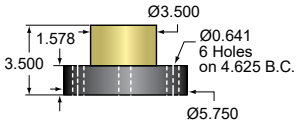

Top plate (optional)
15-MSJ / 15AB-MSJ
p/n: 9000-00-05

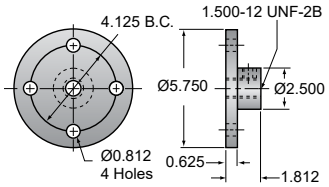

Clevis end (optional)
15-MSJ / 15AB-MSJ
p/n: 9001-00-05

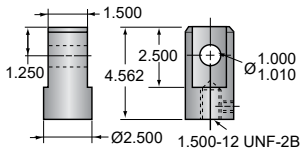

Motor mount (optional)
See page 96 - 97

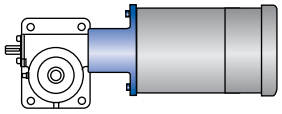

Secondary reducer (optional)
See page 98 - 103

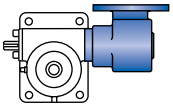

Limit switch (optional)
See page 114 - 117

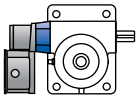

	Non-keyed			Keyed		
	Torque to raise 1 lb (in-lb)	Max. worm speed @ rated load (rpm)	Max. load @ 1750 rpm (lb)	Torque to raise 1 lb (in-lb)	Max. worm speed @ rated load (rpm)	Max. load @ 1750 rpm (lb)
	0.0407	258	4424	0.0468	224	3874
	0.0218	244	2478	0.0251	125	2152

Machine Screw Jacks - 20-MSJ / 20AB-MSJ

Top view
20-MSJ / 5AB-MSJ

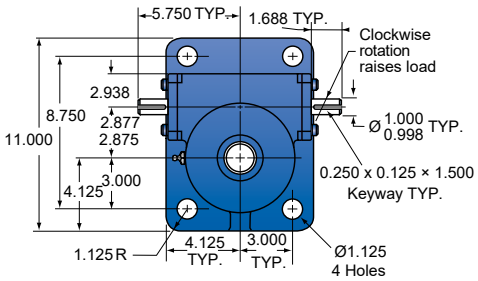

Upright models
20-MSJ-U

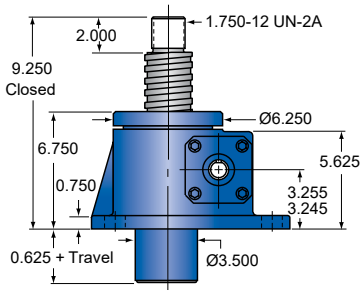

Inverted models
20-MSJ-I

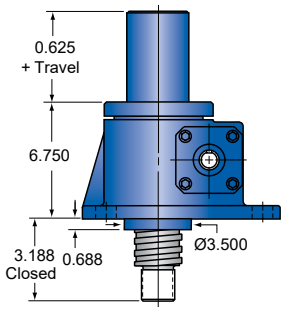

Upright ant-backlash models
20AB-MSJ-U

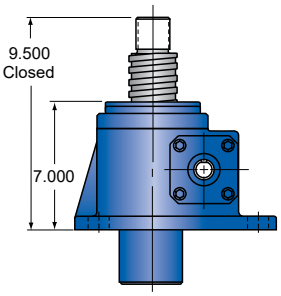

Inverted ant-backlash models
20AB-MSJ-I

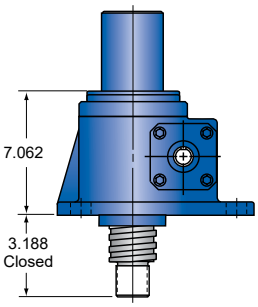

Acme nut and flange
20-MSJ / 20AB-MSJ

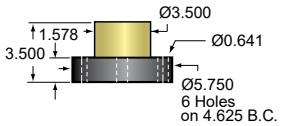

Technical Specifications

Model	Load capacity (ton)	Screw size, (diameter (in) - turns per 1 inch travel)	Gear ratio	Turns of worm for 1 in travel	Max. input torque (in-lb)	Max. allowable input (hp)	Tare drag torque (in-lb)
20-MSJ, 20AB-MSJ	20	2.25 - 2	8:1	16	1740	7½	40
			24:1	48	873	2½	40

Screw Specifications

Root diameter (in)	1.908
Screw lead (in)	0.5
Start torque	2 × running torque
Approx. weight (lb) base weight per inch of travel grease	 80.00 1.80 2.25

Caution: Jack may be self-lowering in some operating conditions. Lifting screw must be secured to prevent rotation for non-keyed units.

Machine Screw Jacks - 20-MSJ / 20AB-MSJ

Upright rotating models[1]
20-MSJ-UR

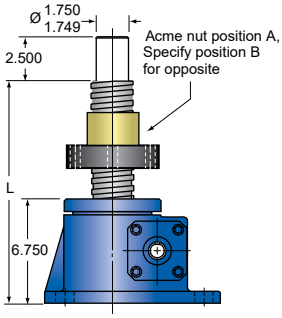

1) At order specify "L" dimension L (min) = travel + 11.25

Inverted rotating models[2]
20-MSJ-IR

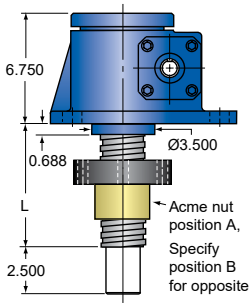

2) At order specify "L" dimension L (min) = travel + 5.19

Upright keyed models
20-MSJ-UK

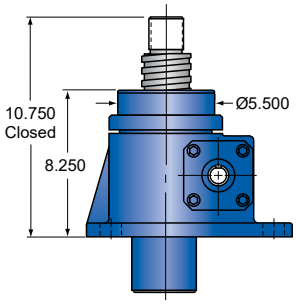

Inverted keyed models
20-MSJ-IK

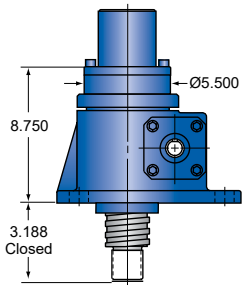

Top plate (optional)
20-MSJ / 20AB-MSJ
p/n: 9000-00-06

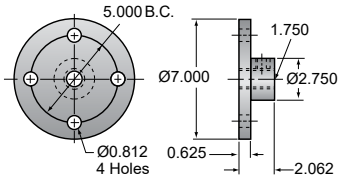

Clevis end (optional)
20-MSJ / 20AB-MSJ
p/n: 9001-00-06

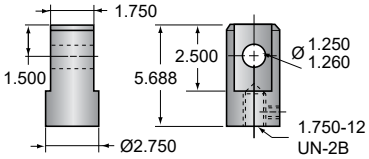

Motor mount (optional)
See page 96 - 97

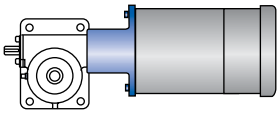

Limit switch (optional)
See page 114 - 117

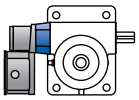

Secondary reducer (optional)
See page 98 - 103

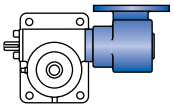

	Non-keyed			Keyed		
	Torque to raise 1 lb (in-lb)	Max. worm speed @ rated load (rpm)	Max. load @ 1750 rpm (lb)	Torque to raise 1 lb (in-lb)	Max. worm speed @ rated load (rpm)	Max. load @ 1750 rpm (lb)
	0.0435	272	6209	0.0500	236	5402
	0.0218	280	4103	0.0251	157	3587

Machine Screw Jacks - 30-MSJ / 30AB-MSJ

Top view
30-MSJ / 30AB-MSJ

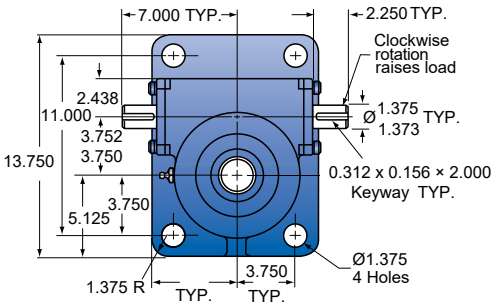

Upright models
30-MSJ-U

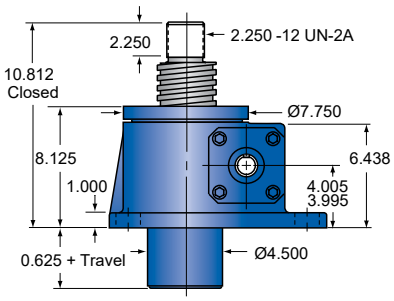

Inverted models
30-MSJ-I

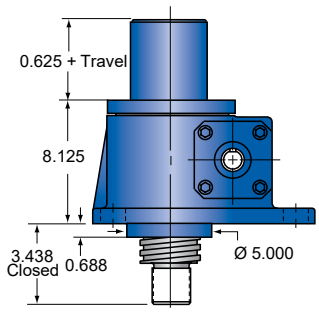

Upright ant-backlash models
30AB-MSJ-U

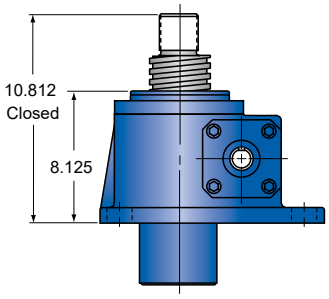

Inverted ant-backlash models
30AB-MSJ-I

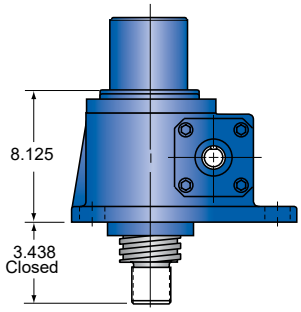

Acme nut and flange
30-MSJ / 30AB-MSJ

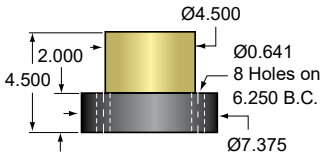

Technical Specifications

Model	Load capacity (ton)	Screw size, (diameter (in) - turns per 1 inch travel)	Gear ratio	Turns of worm for 1 in travel	Max. input torque (in-lb)	Max. allowable input (hp)	Tare drag torque (in-lb)	
30-MSJ, 30AB-MSJ	30	3.375 - 1.5	10.67:1	16	2710	11	50	
			32:1	48	1411	3½	50	

Screw Specifications

Root diameter (in)	2.652
Screw lead (in)	0.667
Start torque	2 × running torque
Approx. weight (lb) base weight per inch of travel grease	 145.0 2.9 3.5

Caution: Jack may be self-lowering in some operating conditions. Lifting screw must be secured to prevent rotation for non-keyed units.

Machine Screw Jacks - 30-MSJ / 30AB-MSJ

Upright rotating models[1]
30-MSJ-UR

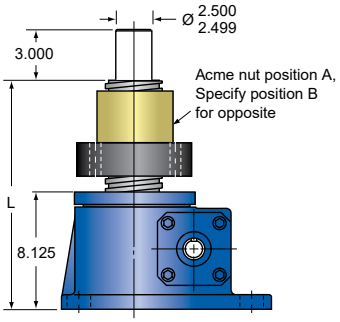

1) At order specify "L" dimension L (min) = travel + 13.56

Inverted rotating models[2]
30-MSJ-IR

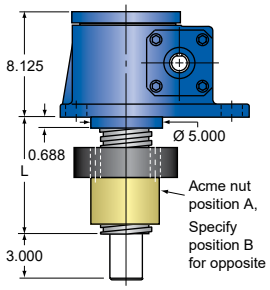

2) At order specify "L" dimension L (min) = travel + 6.19

Upright keyed models
30-MSJ-UK

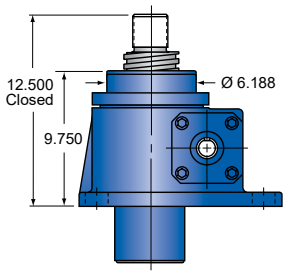

Inverted keyed models
30-MSJ-IK

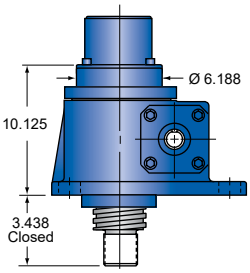

Top plate (optional)
30-MSJ / 30AB-MSJ
p/n: 9000-00-07

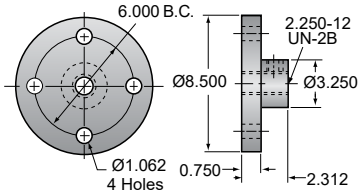

Clevis end (optional)
30-MSJ / 30AB-MSJ
p/n: 9001-00-08

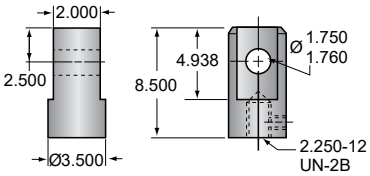

Motor mount (optional)
See page 96 - 97

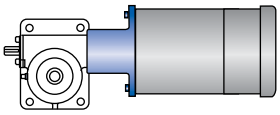

Limit switch (optional)
See page 114 - 117

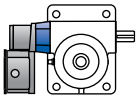

	Non-keyed			Keyed		
	Torque to raise 1 lb (in-lb)	Max. worm speed @ rated load (rpm)	Max. load @ 1750 rpm (lb)	Torque to raise 1 lb (in-lb)	Max. worm speed @ rated load (rpm)	Max. load @ 1750 rpm (lb)
	0.0452	256	8764	0.0520	222	7618
	0.0235	156	5364	0.0270	136	4668

Machine Screw Jacks - 35-MSJ / 35AB-MSJ

Top view
35-MSJ / 35AB-MSJ

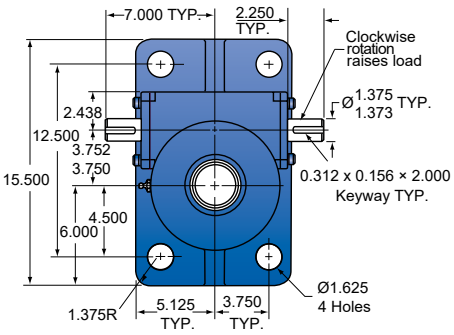

Upright models
35-MSJ-U

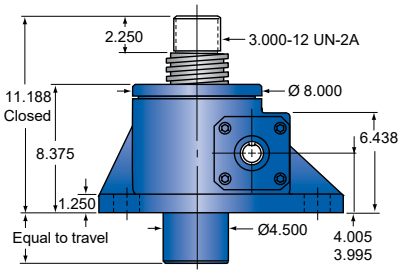

Inverted models
35-MSJ-I

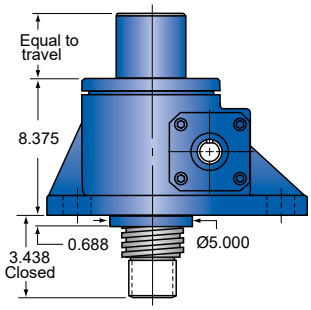

Upright ant-backlash models
35AB-MSJ-U

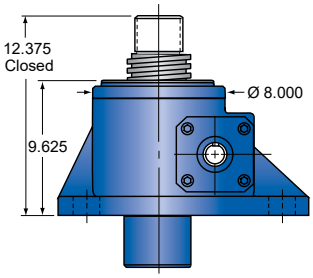

Inverted ant-backlash models
35AB-MSJ-I

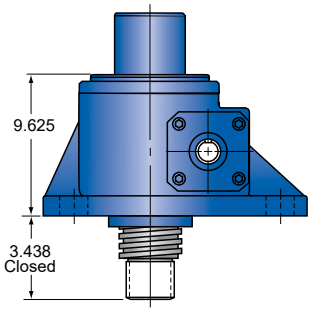

Acme nut and flange
35-MSJ / 35AB-MSJ

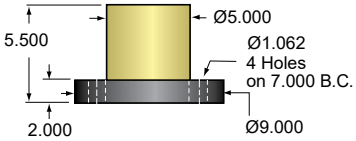

Technical Specifications

Model	Load capacity (ton)	Screw size, (diameter (in) - turns per 1 inch travel)	Gear ratio	Turns of worm for 1 in travel	Max. input torque (in-lb)	Max. allowable input (hp)	Tare drag torque (in-lb)	
35-MSJ, 35AB-MSJ	35	3.375 - 1.5	10.67:1	16	3450	11	50	
			32:1	48	1800	3½	50	

Screw Specifications

Root diameter (in)	3.009
Screw lead (in)	0.667
Start torque	2 × running torque
Approx. weight (lb) base weight per inch of travel grease	 145.0 3.4 3.5

Caution: Jack may be self-lowering in some operating conditions. Lifting screw must be secured to prevent rotation for non-keyed units.

Machine Screw Jacks - 35-MSJ / 35AB-MSJ

Upright rotating models[1]
35-MSJ-UR

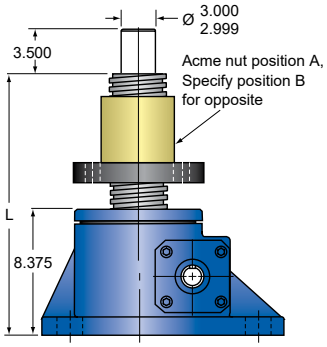

1) At order specify "L" dimension L (min) = travel + 18.38

Inverted rotating models[2]
35-MSJ-IR

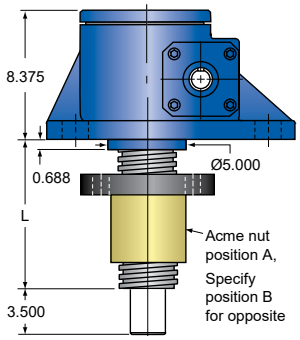

2) At order specify "L" dimension L (min) = travel + 10.69

Upright keyed models[3]
35-MSJ-UK

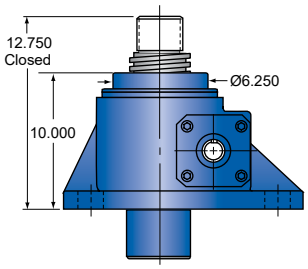

3) For a 35 ton keyed jack, derate max capacity by 40%

Inverted keyed models[3]
35-MSJ-IK

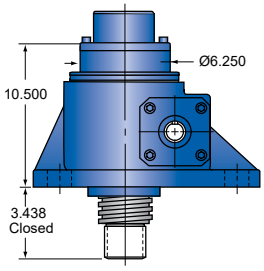

Top plate (optional)
35-MSJ / 35AB-MSJ
p/n: 9000-00-13

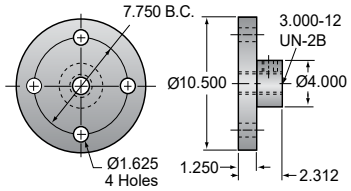

Clevis end (optional)
35-MSJ / 35AB-MSJ
p/n: 9001-00-16

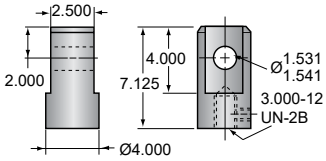

Limit switch (optional)
See page 114 - 117

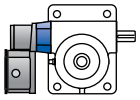

	Non-keyed			Keyed		
	Torque to raise 1 lb (in-lb)	Max. worm speed @ rated load (rpm)	Max. load @ 1750 rpm (lb)	Torque to raise 1 lb (in-lb)	Max. worm speed @ rated load (rpm)	Max. load @ 1750 rpm (lb)
	0.0493	200	8035	0.0570	174	6950
	0.0257	122	4904	0.0295	107	4273

Machine Screw Jacks - 50-MSJ / 50AB-MSJ

Top view
50-MSJ / 50AB-MSJ

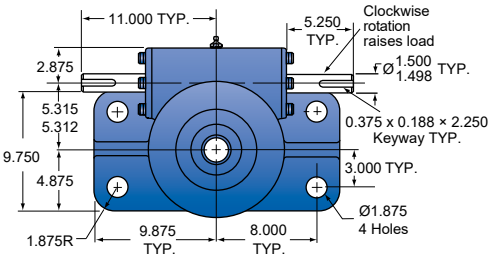

Upright models
50-MSJ-U

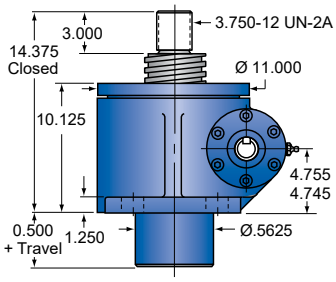

Inverted models
50-MSJ-I

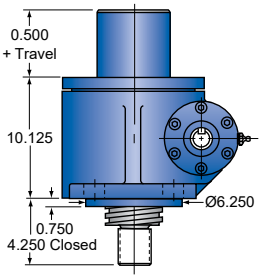

Upright ant-backlash models
50AB-MSJ-U

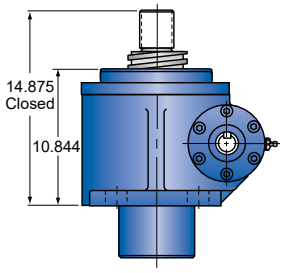

Inverted ant-backlash models
50AB-MSJ-I

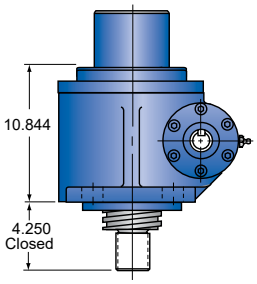

Acme nut and flange
50-MSJ / 50AB-MSJ

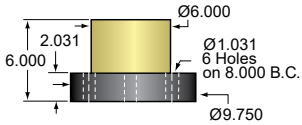

Technical Specifications

Model	Load capacity (ton)	Screw size, (diameter (in) - turns per 1 inch travel)	Gear ratio	Turns of worm for 1 in travel	Max. input torque (in-lb)	Max. allowable input (hp)	Tare drag torque (in-lb)	
50-MSJ, 50AB-MSJ	50	4.5 - 1.5	10.67:1	16	5555	16	100	
			32:1	48	3014	5	100	

Screw Specifications

Root diameter (in)	3.782
Screw lead (in)	0.667
Start torque	2 × running torque
Approx. weight (lb) base weight per inch of travel grease	 280.0 5.0 5.8

Caution: Jack may be self-lowering in some operating conditions. Lifting screw must be secured to prevent rotation for non-keyed units.

Machine Screw Jacks - 50-MSJ / 50AB-MSJ

Upright rotating models[1]
50-MSJ-UR

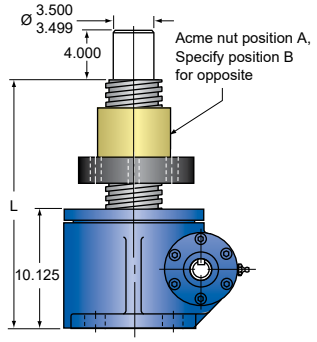

1) At order specify "L" dimension L (min) = travel + 17.88

Inverted rotating models[2]
50-MSJ-IR

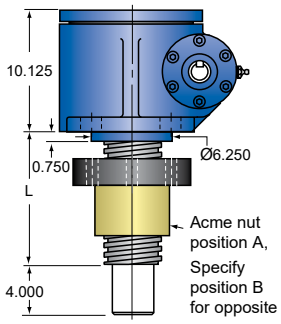

2) At order specify "L" dimension L (min) = travel + 7.75

Upright keyed models[3]
50-MSJ-UK

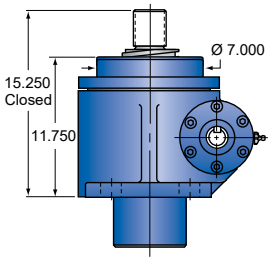

3) For a 50 ton keyed jack, derate max capacity by 35%

Inverted keyed models[3]
50-MSJ-IK

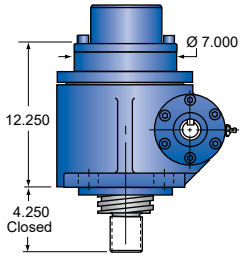

Top plate (optional)
50-MSJ / 50AB-MSJ
p/n: 9000-00-09

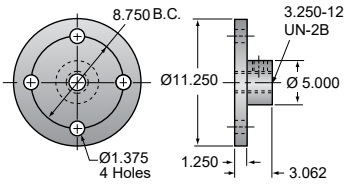

Clevis end (optional)
50-MSJ / 50AB-MSJ
p/n: 9001-00-09

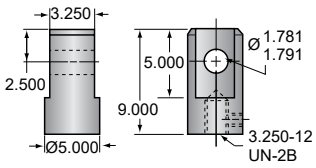

Limit switch (optional)
See page 114 - 117

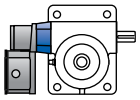

	Non-keyed			Keyed		
	Torque to raise 1 lb (in-lb)	Max. worm speed @ rated load (rpm)	Max. load @ 1750 rpm (lb)	Torque to raise 1 lb (in-lb)	Max. worm speed @ rated load (rpm)	Max. load @ 1750 rpm (lb)
	0.0555	181	10382	0.0638	158	9032
	0.0301	104	5982	0.0346	91	5204

Machine Screw Jacks - 75-MSJ

Top view
75-MSJ

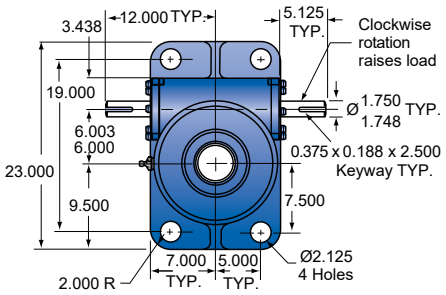

Upright models
75-MSJ-U

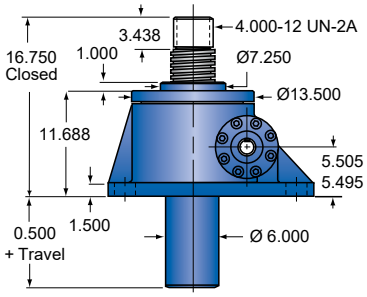

Inverted models
75-MSJ-I

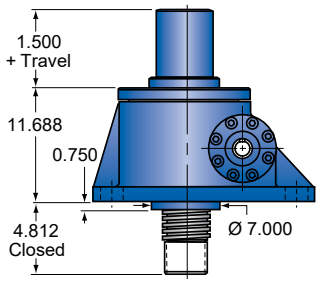

Acme nut and flange
75-MSJ

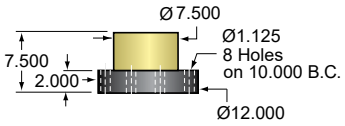

Top plate (optional)
75-MSJ
p/n: 9000-00-20

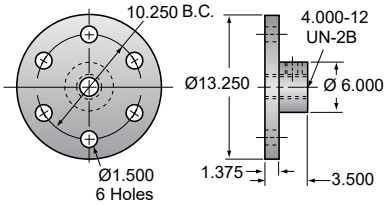

Clevis end (optional)
75-MSJ
p/n: 9001-00-20

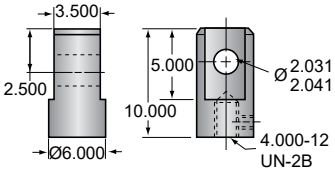

Technical Specifications

Model	Load capacity (ton)	Screw size, (diameter (in) - turns per 1 inch travel)	Gear ratio	Turns of worm for 1 in travel	Max. input torque (in-lb)	Max. allowable input (hp)	Tare drag torque (in-lb)	
75-MSJ	75	5 - 1.5	10.67:1	16	8236	23	155	
			32:1	48	3780	9	155	

Screw Specifications

Root diameter (in)	4.286
Screw lead (in)	0.667
Start torque	2 × running torque
Approx. weight (lb) base weight per inch of travel grease	 610.0 6.5 9.0

Caution: Jack may be self-lowering in some operating conditions. Lifting screw must be secured to prevent rotation for non-keyed units.

Machine Screw Jacks - 75-MSJ

Upright rotating models[1]
75-MSJ-UR

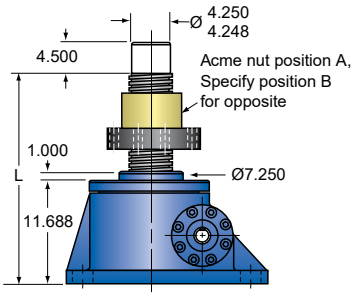

1) At order specify "L" dimension L (min) = travel + 22.19

Inverted rotating models[2]
75-MSJ-IR

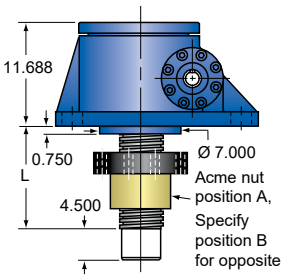

2) At order specify "L" dimension L (min) = travel + 10.25

Upright keyed models[3]
75-MSJ-UK

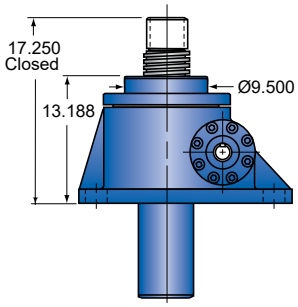

Inverted keyed models[3]
75-MSJ-IK

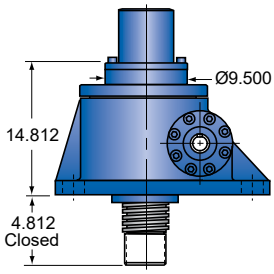

3) For a 75 ton keyed jack, derate max capacity by 35%

Limit switch (optional)
See page 114 - 117

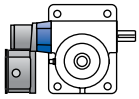

	Non-keyed			Keyed		
	Torque to raise 1 lb (in-lb)	Max. worm speed @ rated load (rpm)	Max. load @ 1,750 rpm (lb)	Torque to raise 1 lb (in-lb)	Max. worm speed @ rated load (rpm)	Max. load @ 1,750 rpm (lb)
	0.0549	214	18368	0.0631	186	15950
	0.0252	150	12862	0.0290	130	11180

Stainless Steel Machine Screw Jacks

ActionJac™ stainless steel machine screw jacks are ideal for use in demanding environments where corrosion resistance is required. All external components are manufactured from 300 series stainless steel materials. These jacks use a stainless steel worm gear with a high-strength bronze drive sleeve. The worm gear and drive sleeve are supported by tapered roller bearings and sealed to prevent loss of lubrication and to resist contamination. The stainless steel lifting screw threads are precision formed to Class 2-C (centralizing) thread profiles. Load capacities for stainless steel machine screw jacks range from 0.66 to 6.66 tons. A 17-4PH hardened worm is available for a 300% increase in capacity.

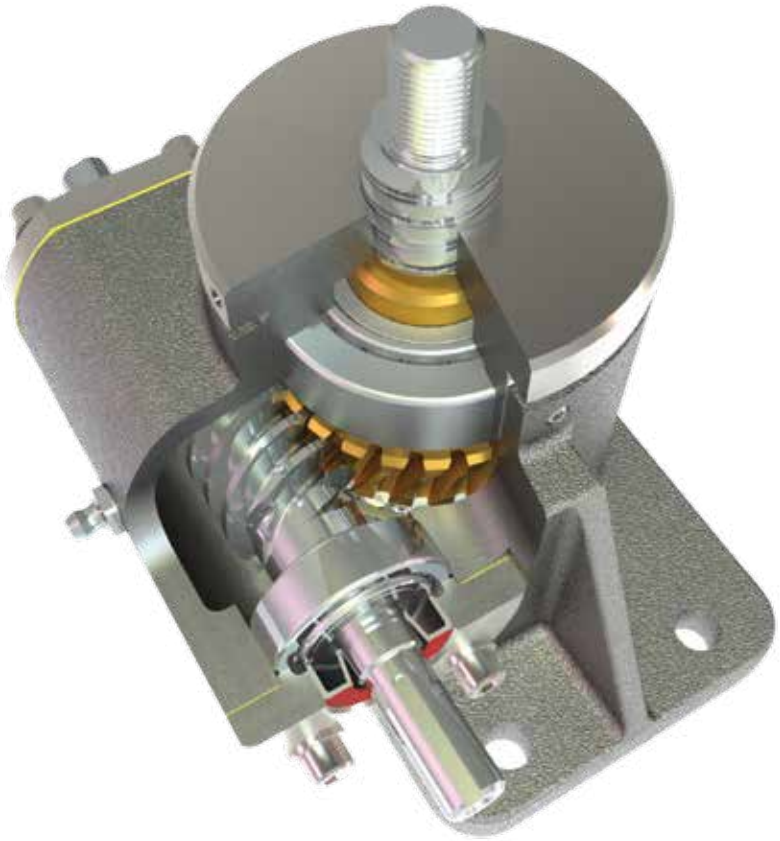

Stainless Steel Machine Screw Jacks

Quick Reference - Stainless Steel Machine Screw Jacks

Model	Gear ratio	Capacity (ton)	Lifting screw diam. (in)	Screw lead (in)	Root diam. (in)	Turns of worm for 1 in travel	Max. input torque (in.-lb.)	Max. input (hp)	Max. worm speed @ rated load (rpm)	Max. load @ 1750 rpm (lb)	Torque to raise 1 lb. (in-lb)	Tare drag torque (in-lb)
2SS-MSJ	6:1	0.66	1.00	0.250	0.698	24	33	2	1800	1320	0.0250	4
	24:1	0.66	1.00	0.250	0.698	96	14	½	1800	1320	0.0150	4
5SS-MSJ	6:1	1.67	1.50	0.375	1.066	16	125	3	1510	2873	0.0376	10
	24:1	1.67	1.50	0.375	1.066	64	48	¾	985	1875	0.0144	10
10SS-MSJ	8:1	3.33	2.00	0.500	1.410	16	251	5	1255	4775	0.0377	20
	24:1	3.33	2.00	0.500	1.410	48	128	1½	739	2813	0.0192	20
20SS-MSJ	8:1	6.66	2.25	0.500	1.908	16	580	5	540	4140	0.0435	40
	24:1	6.66	2.25	0.500	1.908	48	291	1½	325	2478	0.0218	40

If the worm is changed to 17-4PH, refer to page 51 for jack capacity.

Notes:

1. The recommended maximum speed is 1,800 rpm provided that the recommended horsepower and temperature are not exceeded.
2. Input torque is shown as torque to lift one pound of load. Starting torque is 100% greater than torque shown. Tare drag torque should be added for all loads.
3. Maximum allowable horsepower ratings are based on a 25% duty cycle at standard ambient temperature, with 1 minute on / 2 minute off cycles. For operation at higher duty cycles or repeated use over any segment of the total travel, temperature must be monitored and remain less than 200°F.
4. Overload capacity of the stainless steel machine screw jack is as follows: 10% for dynamic loads, 30% for static loads.
5. Stainless steel machine screw jacks having gear ratios between 20:1 and 32:1 are self-locking and will hold loads without backdriving in the absence of vibration. All other ratios may require a brake to prevent backdriving.
   Note: Vibration can cause any jack assembly to creep or backdrive. When using any jack assembly, applications should be analyzed to determine the necessity of a brake, especially when the possibility of injury may occur.
6. All units are suitable for intermittent operation providing that the housing temperature including ambient is not lower than -20°F or higher than +200°F. Factory supplied grease in standard units will operate in this range. For higher or lower operating temperature ranges, consult Thomson.
7. Accessories such as boots, top plates and clevises are available.
8. Catalog dimensions are representative only and are subject to change without notice. For construction, use only certified prints.
9. Units are not to be used as personnel support or movement.
10. End-of-travel stops are not provided.
11. For greater capacity, specify a 17-4PH hardened worm.
12. Tare drag torque need only be added if operating under 25% rated load.
13. Starting torque is 100% greater than torque shown.

Stainless steel ActionJac screw jack used in a dairy processing application.

Stainless Steel Machine Screw Jacks

Column Strength

Column strength is the ability of the lift shaft to hold compressive loads without buckling. With longer screw lengths, column strength may be substantially lower than nominal jack capacity. If the lift shaft is in tension only, the screw jack travel is limited by the available screw material or by the critical speed of the screw. If there is any possibility for the lift shaft to go into compression, the application should be sized for sufficient column strength.

The chart below is used to determine the required jack size in applications where the lift shaft is loaded in compression.

Available Lift Screw Lengths

Thomson has the capacity to make long ball screws for special applications. Rotating screw jacks can be built with a larger diameter lift screw for greater column strength, or a different lead to change the jack operating speed.

To Use This Chart

Find a point at which the maximum length "L" intersects the maximum load. Be sure the jack selected is above and to the right of that point.

Note: chart does not include a design factor. The chart assumes proper jack alignment with no bending loads on the screw. Effects from side loading are not included in this chart. Jacks operating horizontally with long lift shafts can experience bending from the weight of the screw.

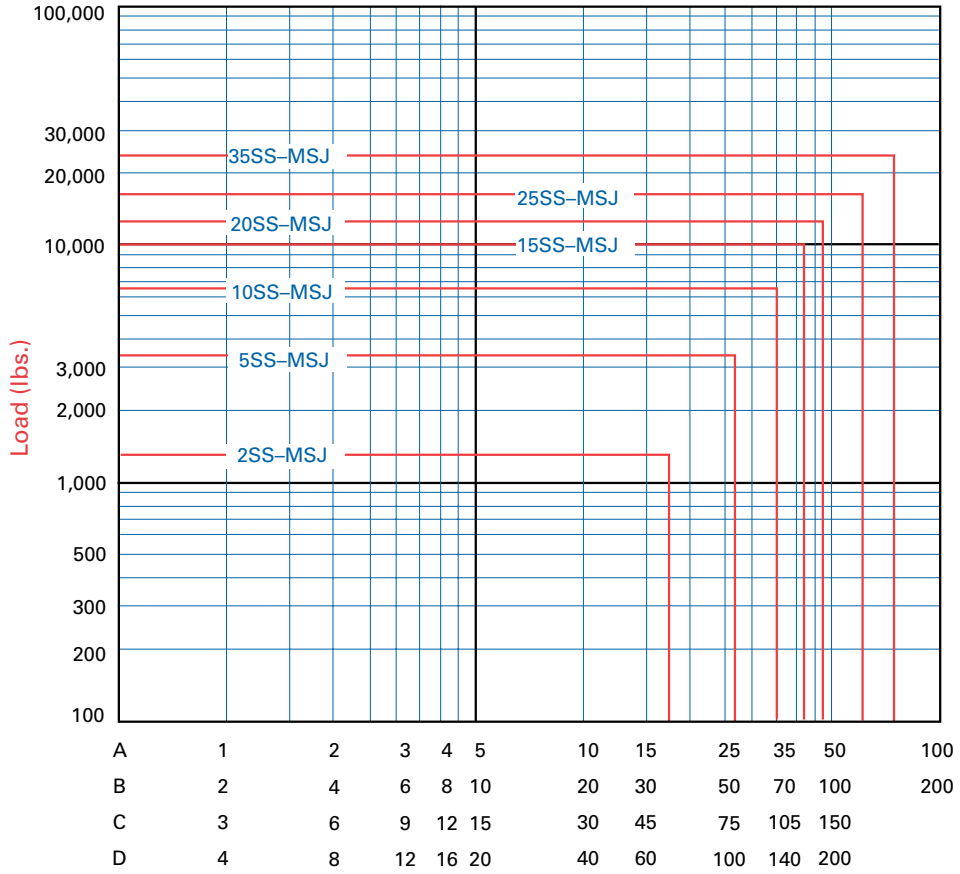

"L" (inches)

Inch Stainless Steel Machine Screw Jack

MOUNTING CONDITIONS

A

ONE END FIXED
ONE END FREE

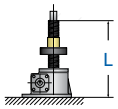

B

BOTH ENDS SUPPORTED BY CLEVIS ENDS

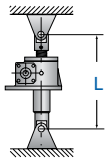

C

ONE END FIXED, ONE END SUPPORTED (CLEVIS ATTACHED TO GUIDE STRUCTURE)

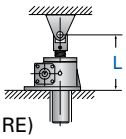

ONE END FIXED, ONE END SUPPORTED (RADIAL BEARING))

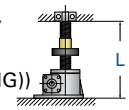

D

BOTH ENDS FIXED (TOP PLATE ATTACHED TO GUIDED STRUCTURE)

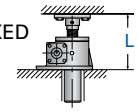

Stainless Steel Machine Screw Jacks

Ordering Key

1	2	3		4		5		6	7		8		9
2SS-MSJ-	**U**	**6:1**	**/**	**SSE-1**	**/**	**000-2**	**/**	**F**	**T**	**/**	**24.5**	**/**	**BS**

1. Stainless steel machine screw model
2SS-MSJ
5SS-MSJ
10SS-MSJ
20SS-MSJ

2. Configuration
U = upright
I = inverted
UR = upright rotating
IR = inverted rotating

3. Gear ratio
See product pages for available gear ratios

4 and 5 Shaft order code
A position note must be included.
Both shaft extensions must be specified.

SSE - 1 — CCW position 1
CW position 2

No accessory (position 1 or 2)
SSE = Standard shaft extension
000 = Delete shaft extension
SPC = Special modofied shaft extension

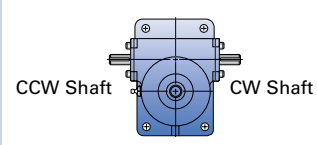

6. Housing configuration
F = standard flange base

7. Screw configuration
Translating models (U and I configurations)
T = standard threaded end
C = clevis end
P = top plate

Rotating models (UR and IR configurations)
A = travel nut position "A"
B = travel nut position "B"

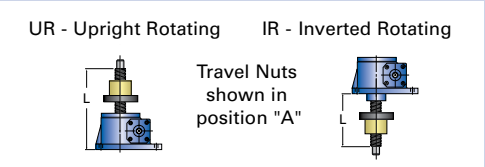

8. Travel
Translating models (U and I configurations)
Use actual travel in inches.
Rotating models (UR and IR configurations)
Use "L" dimension in inches.

9. Modifier list
Optional codes
B = bellows boots (se page 123. Must calculate extend and retract length)
H = hardened worm

Required codes
S = standard (no additional description required)
M = modified (additional description required)

Stainless Steel Machine Screw Jacks - 2SS-MSJ

Top view
2SS-MSJ

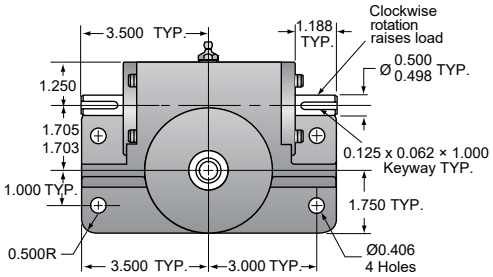

Upright models
2SS-MSJ-U

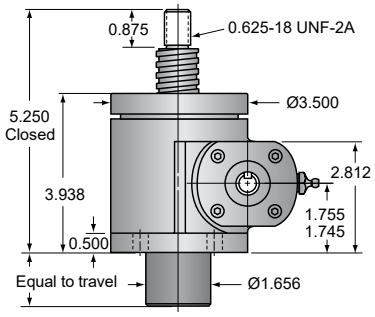

Inverted models
2SS-MSJ-I

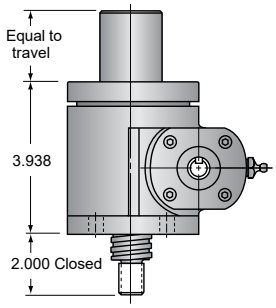

Acme nut and flange
2SS-MSJ

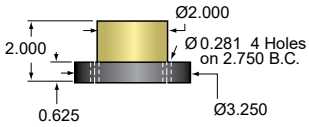

Top plate (optional)
2SS-MSJ
p/n: 9000-SS-01

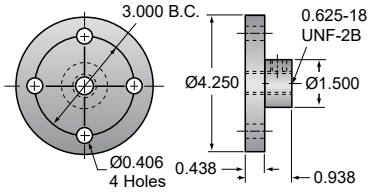

Clevis end (optional)
2SS-MSJ
p/n: 9001-SS-01

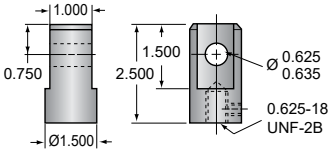

Technical Specifications

Model	Load capacity* (ton)	Screw size, (diameter (in) - turns per 1 inch travel)	Gear ratio	Turns of worm for 1 in travel	Max. input torque (in-lb)	Max. allowable input (hp)	Tare drag torque (in-lb)
2SS-MSJ	0.66	1 - 4	6:1	24	33	2	4
			12:1	48	14	1/2	4

* For greater capacity, specify a 17-4PH hardened worm.

Screw Specifications

Root diameter (in)	0.698
Screw lead (in)	0.250
Start torque	2 × running torque
Approx. weight (lb) base weight per inch of travel grease	 17.0 0.5 0.5

Caution: Jack may be self-lowering in some operating conditions. Lifting screw must be secured to prevent rotation for non-keyed units.

Stainless Steel Machine Screw Jacks - 2SS-MSJ

Upright rotating models[1]
2SS-MSJ-UR

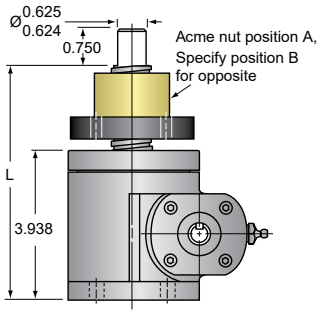

1) At order specify "L" dimension L (min) = travel + 6.94

Inverted rotating models[2]
2SS-MSJ-IR

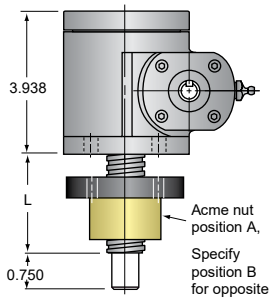

2) At order specify "L" dimension L (min) = travel + 3.62

Motor mount (optional)
See page 96 - 97

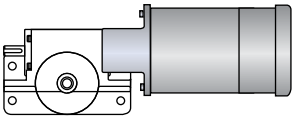

Limit switch (optional)
See page 114 - 117

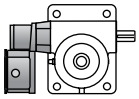

	Non-keyed		
	Torque to raise 1 lb (in-lb)	Max. worm speed @ rated load (rpm)	Max. load @ 1750 rpm (lb)
	0.0250	1800	1320
	0.0150	1800	1320

Stainless Steel Machine Screw Jacks - 5SS-MSJ

Top view
5SS-MSJ

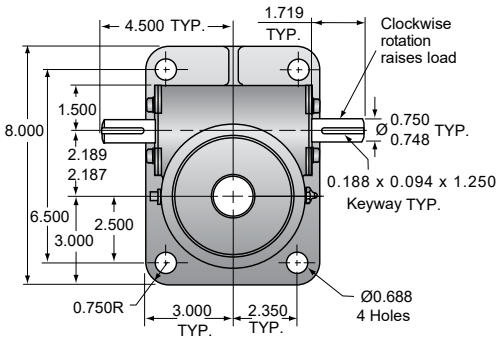

Upright models
5SS-MSJ-U

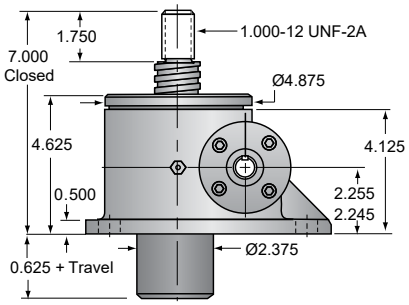

Inverted models
5SS-MSJ-I

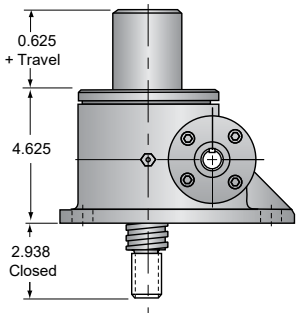

Acme nut and flange
5SS-MSJ

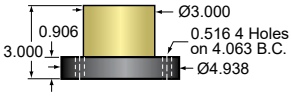

Top plate (optional)
5SS-MSJ
p/n: 9000-SS-02

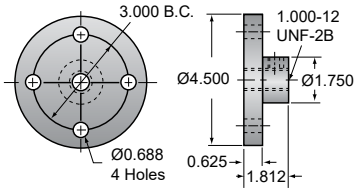

Clevis end (optional)
5SS-MSJ
p/n: 9001-SS-02

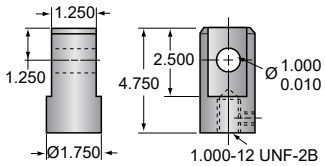

Technical Specifications

Model	Load capacity* (ton)	Screw size, (diameter (in) - turns per 1 inch travel)	Gear ratio	Turns of worm for 1 in travel	Max. input torque (in-lb)	Max. allowable input (hp)	Tare drag torque (in-lb)
5SS-MSJ	1.67	1.5 - 2.66	6:1	16	125	3	10
			24:1	64	48	3/4	10

* For greater capacity, specify a 17-4PH hardened worm.

Screw Specifications

Root diameter (in)	1.066
Screw lead (in)	0.375
Start torque	2 × running torque
Approx. weight (lb) base weight per inch of travel grease	 32.0 0.7 1.0

Caution: Jack may be self-lowering in some operating conditions. Lifting screw must be secured to prevent rotation for non-keyed units.

Stainless Steel Machine Screw Jacks - 5SS-MSJ

Upright rotating models[1]
5SS-MSJ-UR

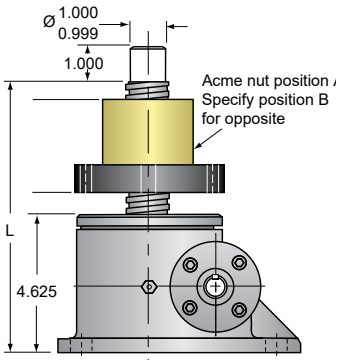

1) At order specify "L" dimension L (min) = travel + 8.62

Inverted rotating models[2]
5SS-MSJ-IR

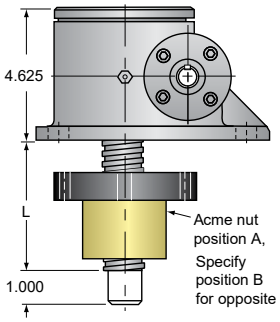

2) At order specify "L" dimension L (min) = travel + 4.00

Motor mount (optional)
See page 96 - 97

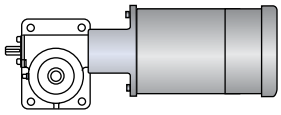

Limit switch (optional)
See page 114 - 117

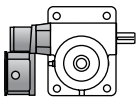

	Non-keyed		
	Torque to raise 1 lb (in-lb)	Max. worm speed @ rated load (rpm)	Max. load @ 1750 rpm (lb)
	0.0376	1510	2873
	0.0144	985	1375

Stainless Steel Machine Screw Jacks - 10SS-MSJ

Top view
10SS-MSJ

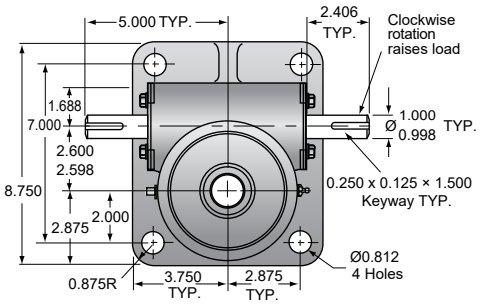

Upright models
10SS-MSJ-U

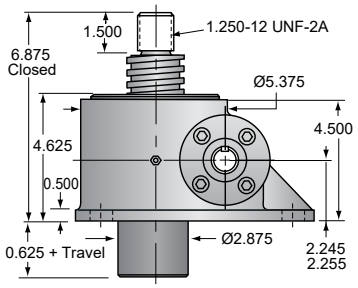

Inverted models
10SS-MSJ-I

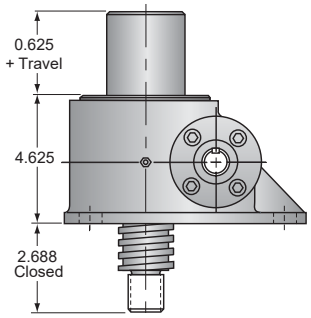

Acme nut and flange
10SS-MSJ

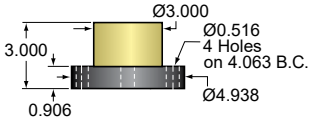

Top plate (optional)
10SS-MSJ
p/n: 9000-SS-03

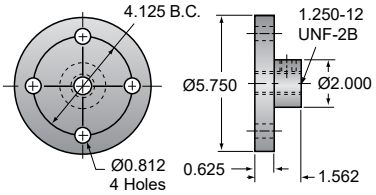

Clevis end (optional)
10SS-MSJ
p/n: 9001-SS-03

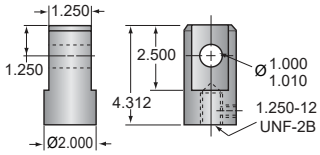

Technical Specifications

Model	Load capacity* (ton)	Screw size, (diameter (in) - turns per 1 inch travel)	Gear ratio	Turns of worm for 1 in travel	Max. input torque (in-lb)	Max. allowable input (hp)	Tare drag torque (in-lb)
10SS-MSJ	3.33	2 - 2	8:1	16	251	5	20
			24:1	48	128	1½	20

* For greater capacity, specify a 17-4PH hardened worm.

Screw Specifications

Root diameter (in)	1.410
Screw lead (in)	0.375
Start torque	2 × running torque
Approx. weight (lb) base weight per inch of travel grease	 50.0 1.2 1.5

Caution: Jack may be self-lowering in some operating conditions. Lifting screw must be secured to prevent rotation for non-keyed units.

Stainless Steel Machine Screw Jacks - 10SS-MSJ

Upright rotating models[1]
10SS-MSJ-UR

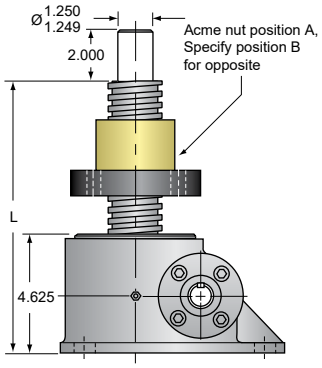

1) At order specify "L" dimension L (min) = travel + 8.62

Inverted rotating models[2]
10SS-MSJ-IR

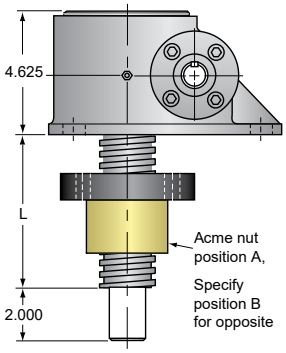

2) At order specify "L" dimension L (min) = travel + 4.00

Motor mount (optional)
See page 96 - 97

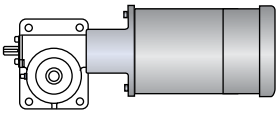

Limit switch (optional)
See page 114 - 117

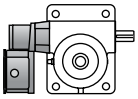

	Non-keyed		
	Torque to raise 1 lb (in-lb)	Max. worm speed @ rated load (rpm)	Max. load @ 1750 rpm (lb)
	0.0377	1255	4775
	0.0192	739	2813

Stainless Steel Machine Screw Jacks - 20SS-MSJ

Top view
20SS-MSJ

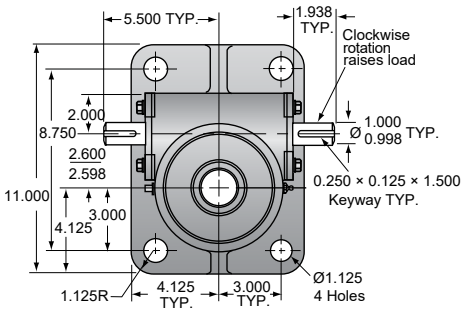

Upright models
20SS-MSJ-U

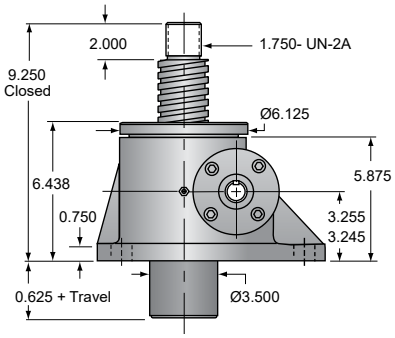

Inverted models
20SS-MSJ-I

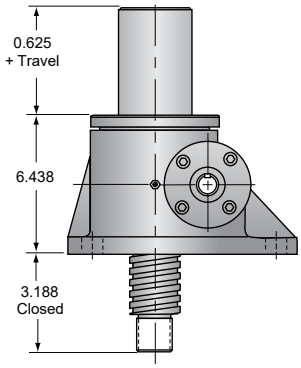

Acme nut and flange
20SS-MSJ

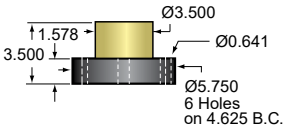

Top plate (optional)
20SS-MSJ
p/n: 9000-SS-06

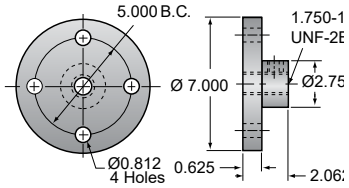

Clevis end (optional)
20SS-MSJ
p/n: 9001-SS-06

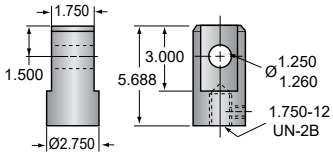

Technical Specifications

Model	Load capacity* (ton)	Screw size, (diameter (in) - turns per 1 inch travel)	Gear ratio	Turns of worm for 1 in travel	Max. input torque (in-lb)	Max. allowable input (hp)	Tare drag torque (in-lb)
20SS-MSJ	6.66	2.5 - 2	8:1	16	580	5	40
			24:1	48	291	1½	40

* For greater capacity, specify a 17-4PH hardened worm.

Screw Specifications

Root diameter (in)	1.908
Screw lead (in)	0.500
Start torque	2 × running torque
Approx. weight (lb) base weight per inch of travel grease	 85.00 2.00 2.25

Caution: Jack may be self-lowering in some operating conditions. Lifting screw must be secured to prevent rotation for non-keyed units.

Stainless Steel Machine Screw Jacks - 20SS-MSJ

Upright rotating models[1]
20SS-MSJ-UR

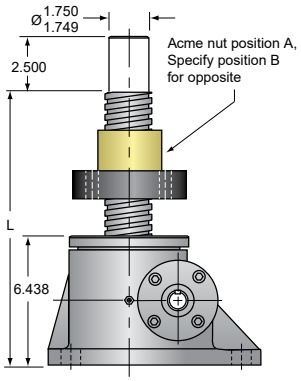

1) At order specify "L" dimension L (min) = travel + 10.94

Inverted rotating models[2]
20SS-MSJ-IR

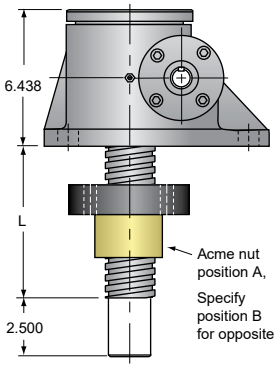

2) At order specify "L" dimension L (min) = travel + 4.50

Motor mount (optional)
See page 96 - 97

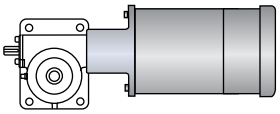

Limit switch (optional)
See page 114 - 117

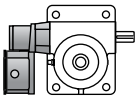

	Non-keyed		
	Torque to raise 1 lb (in-lb)	Max. worm speed @ rated load (rpm)	Max. load @ 1750 rpm (lb)
	0.0435	540	4140
	0.0218	325	2478

Accessories

Thomson offers many accessories to accommodate specific applications. From motor mounts to limit switches to lubricant, Thomson has the jack accessories to match the linear motion needs of any application.

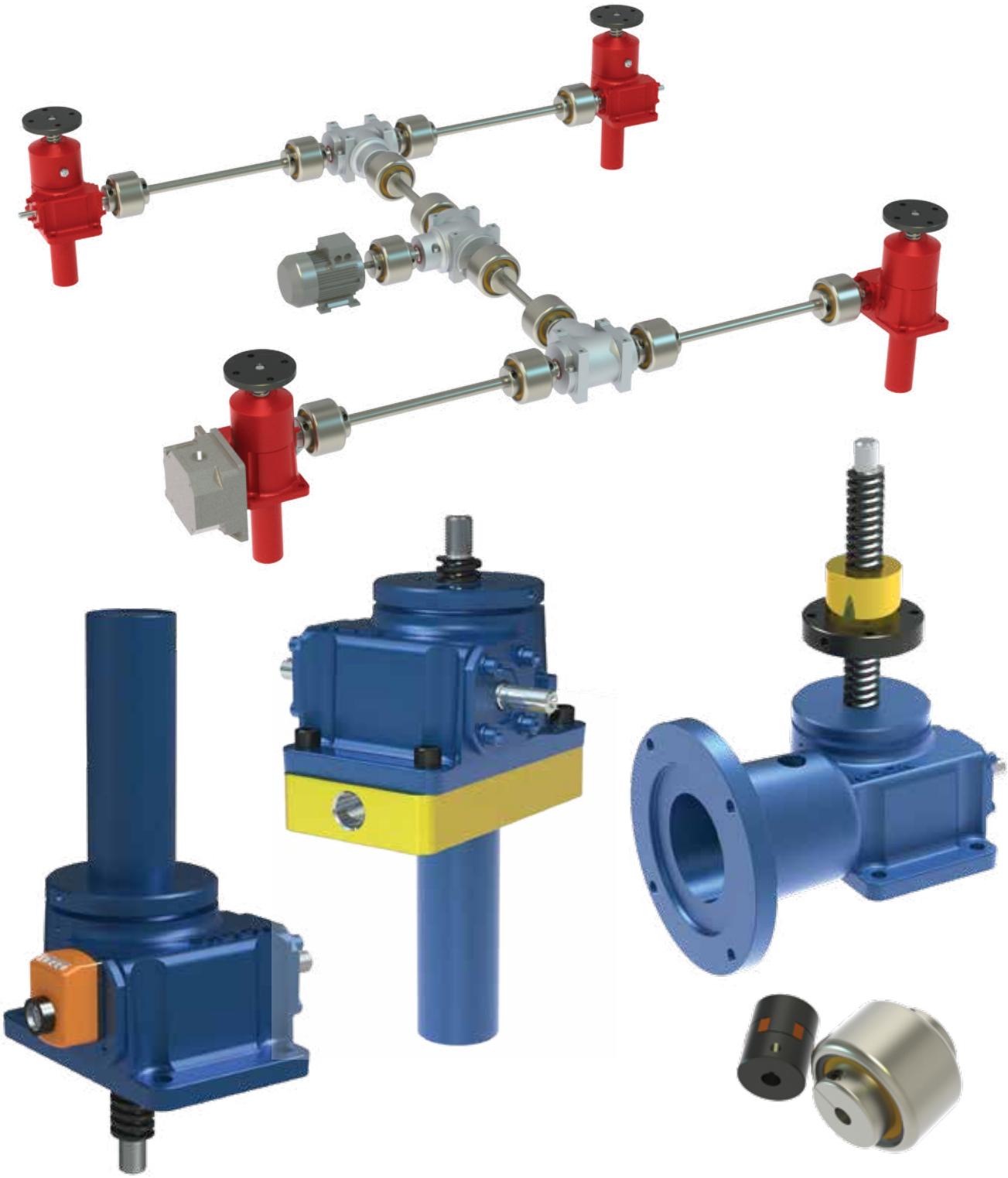

Accessories

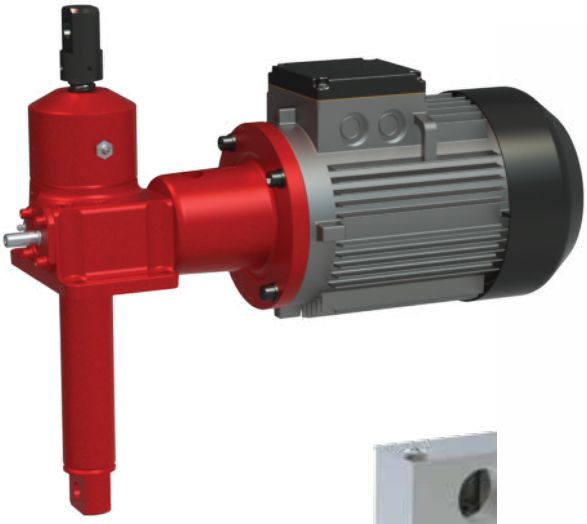

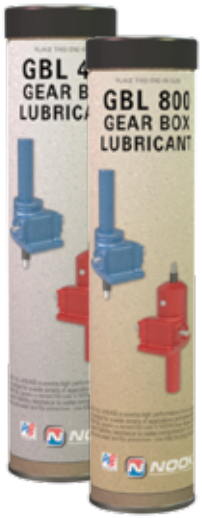

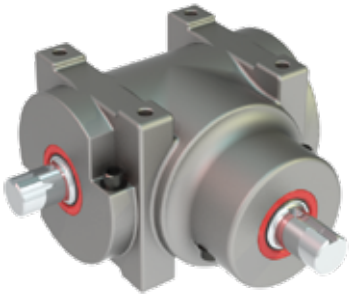

Accessories - Motor Mounts with/without Brake Motors

ActionJac™ motor mount assemblies are designed for standard motors and include jaw type couplings. These assemblies are available for the jack sizes listed in the table. Non-standard motor mounts can be designed for special requirements.

ActionJac worm gear screw jacks can be ordered with industrial-quality induction motors. Motors with internally and externally wired brake motors are available. Brake motors utilize an integral, spring-actuated brake. Standard motors are 3-phase, 230 - 460 Vac, 60 Hz, 1,725 rpm. Single-phase motors are 115 - 130 Vac, 60 Hz, 1,725 rpm. All motors are rated for continuous duty. Specific duty motors such as wash down extended duty may be supplied upon request. See charts for order codes and motor mount dimensions.

Note: Ball screw jacks are self-lowering. A brake of sufficient torque is required to hold the load with a ball screw jack. Be sure to verify that the brake motor selected has sufficient brake torque for your application.

How to Order a Motor Adapter

Example without motor
2.5-BSJ-U 6:1 / **X05-1** / SSE-2 / FT / 12.0 / S

X05 = no motor product code
1 = mounting position

Example with motor
2.5-BSJ-U 6:1 / **10LT-1** / SSE-2 / FT / 12.0 / S

10LT = motor order code (see page 104)
1 = mounting position

Motor Mount Mounting Positions

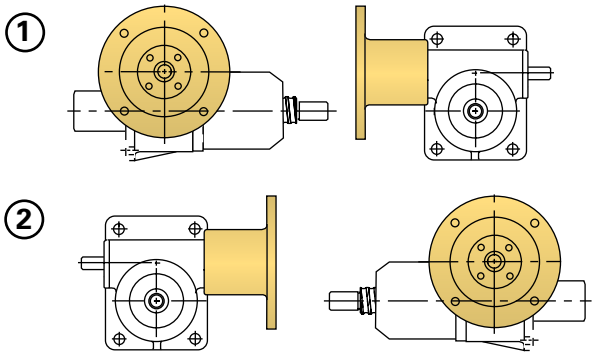

Accessories - Motor Mounts with/without Brake Motors

Motor Mounts

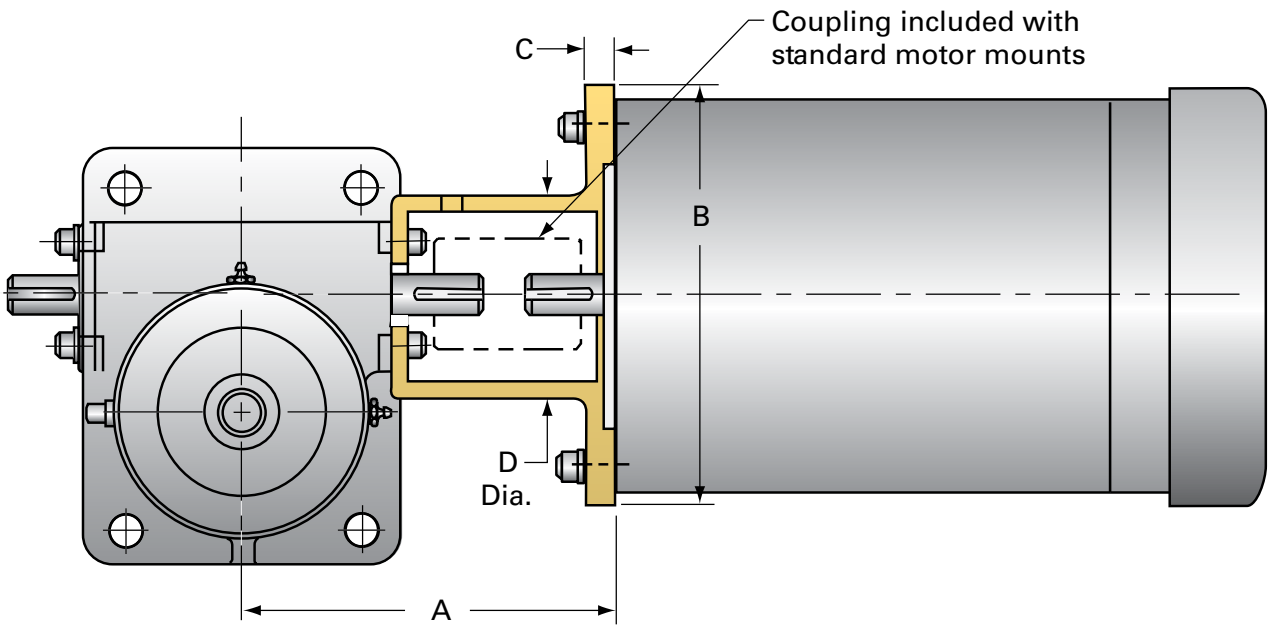

Motor Mounts						
Jack size (ton)	Nema frame size	Product code	Dimensions (in)			
			A	B	C	D
2.5	56C	X05	6.25	6.63	0.63	3.50
	140TC	X14	6.25	6.63	0.63	3.50
5	56C	X05	7.25	6.75	0.56	3.75
	140TC	X14	7.25	6.75	0.56	3.75
	180TC	X18	8.00	9.25	0.75	3.75
10, 15	56C	X05	8.25	6.75	0.50	4.38
	140TC	X14	8.25	6.75	0.50	4.38
	180TC	X18	9.00	9.25	0.75	4.38
20	56C	X05	8.66	6.75	0.50	3.75
	140TC	X14	8.66	6.75	0.50	3.75
	180TC	X18	9.00	9.25	0.63	5.19
	213TC	X21	9.68	8.88	0.88	5.69

Accessories - Right-Angle Reducers

The right-angle reducer is a secondary worm gear reducer that reduces speed and increases torque to the input of the jack. If motor clearance is an issue, a right-angle reducer may be added to most jacks to optimize motor orientation. Right-angle reducers are available in two different styles - high efficiency and standard efficiency. Right-angle reducers may be installed on the standard ActionJac™ machine screw and ball screw jacks listed below at the time of the order and are available with or without brake motors.

High-Efficiency Right-Angle Reducers

The high-efficiency right-angle reducer is a compact, high-quality worm gear reducer enclosed in a cast aluminium housing. The reducer mounts directly to the input side of the jack. Motors mount quill-style to a standard NEMA C-face. The high-efficiency right-angle reducers are non-vented, oil filled and maintenance free. They are rated at 85% or greater efficiency. High-efficiency right-angle reducers are available in a variety of NEMA motor mounts. Consult the data charts for jack capacity when a right-angle reducer is used. Ratings given on the chart may differ when a right-angle reducer is installed on keyed or anti-backlash machine screw jack models. Special consideration must be given when installing onto a double-clevis jack due to the additional weight of the reducer.

How to Order a Right-Angle Reducer

Right-angle reducer ratio, mounting position, and brake motor size and type must be specified. The data chart below gives order codes for right-angle reducers with and without brake motors. Insert the order code and mounting position as shown on page 19, 55 and 85.

Example
2.5-BSJ-U 6:1 / **05LTR7** - **7** / 2CA-2 / FT / 24.5 / S

05LT = motor product code (see page 104)

R5 = gear ratio 5:1
R7 = gear ration 7.5 :1
R10 = gear ratio 10:1
R15 = gera ratio 15:1

7 = mounting position (see page 101)

Accessories - Right-Angle Reducers

High Efficiency Right-Angle Reducers for Ball Screw Jacks

Jack model - ratio	Reducer ratio	Max input speed (rpm)	Travel rate @ 1725 rpm (in/min)	Dynamic load capacity per motor horsepower (lb) *						
				0.25	0.33	0.50	075	1.00	1.50	2.00
2.5-BSJ-6:1	5:1	1725	14.38	3780	5000	–	–	–	–	–
	7.5:1	1725	9.58	5000	–	–	–	–	–	–
	10:1	1725	7.19	5000	–	–	–	–	–	–
	15:1	1725	4.79	5000	–	–	–	–	–	–
2.5-BSJ-24:1	5:1	1725	3.59	5000	–	–	–	–	–	–
	7.5:1	1725	2.40	5000	–	–	–	–	–	–
	10:1	1725	1.80	5000	–	–	–	–	–	–
	15:1	1725	1.20	5000	–	–	–	–	–	–
2.5HL-BSJ-6:1	5:1	1725	57.50	950	1270	1910	1910	3820	5000	–
	7.5:1	1725	38.33	1400	1860	2800	2800	5000	–	–
	10:1	1725	28.75	1820	2430	3640	3640	–	–	–
	15:1	1725	19.17	2640	3520	5000	5000	–	–	–
5-BSJ-6:1	5:1	1725	27.24	–	–	4210	6320	8430	10000	–
	7.5:1	1725	18.16	–	–	6260	9400	10000	–	–
	10:1	1725	13.62	–	–	8140	10000	–	–	–
	15:1	1725	9.08	–	–	10000	–	–	–	–
5-BSJ-24:1	5:1	1725	6.81	–	–	10000	–	–	–	–
	7.5:1	1725	4.54	–	–	10000	–	–	–	–
	10:1	1725	3.40	–	–	10000	–	–	–	–
	15:1	1725	2.27	–	–	10000	–	–	–	–
5HL-BSJ-6:1	5:1	1725	57.50	–	–	1990	2990	3990	5980	7970
	7.5:1	1725	38.33	–	–	2960	4440	5920	8890	10000
	10:1	1725	28.75	–	–	3850	5780	7700	10000	–
	15:1	1725	19.17	–	–	5510	8270	10000	–	–
5HL-BSJ-24:1	5:1	1725	14.38	–	–	5040	7560	–	–	–
	7.5:1	1725	9.58	–	–	7490	10000	–	–	–
	10:1	1725	7.19	–	–	9740	10000	–	–	–
	15:1	1725	4.79	–	–	10000	–	–	–	–
10-BSJ-8:1	7.5:1	1725	13.62	–	–	–	11370	15160	20000	–
	10:1	1725	10.21	–	–	–	15000	20000	–	–
	15:1	1725	6.81	–	–	–	20000	–	–	–
10-BSJ-24:1	7.5:1	1725	4.54	–	–	–	20000	–	–	–
	10:1	1725	3.40	–	–	–	20000	–	–	–
	15:1	1725	2.27	–	–	–	20000	–	–	–
10HL-BSJ-8:1	7.5:1	1725	28.75	–	–	–	5380	7180	10760	14350
	10:1	1725	21.56	–	–	–	7100	9470	14200	18930
	15:1	1725	14.38	–	–	–	10170	13560	20000	–
20-BSJ-8:1	7.5:1	1725	14.38	–	–	–	–	–	22130	29510
	10:1	1725	10.78	–	–	–	–	–	29140	38860
	15:1	1725	7.19	–	–	–	–	–	40000	–
20-BSJ-24:1	7.5:1	1725	4.79	–	–	–	–	–	40000	–
	10:1	1725	3.59	–	–	–	–	–	40000	–
	15:1	1725	2.39	–	–	–	–	–	40000	–
20HL-BSJ-8:1	7.5:1	1725	28.75	–	–	–	–	–	11100	14800
	10:1	1725	21.56	–	–	–	–	–	14620	19490
	15:1	1725	14.38	–	–	–	–	–	21180	28240
20HL-BSJ-24:1	7.5:1	1725	9.58	–	–	–	–	–	22130	29510
	10:1	1725	7.18	–	–	–	–	–	29140	38860
	15:1	1725	4.79	–	–	–	–	–	40000	–

* Full nominal static capacity of jack is retained

Accessories - Right-Angle Reducers

High Efficiency Right-Angle Reducers for Machine Screw Jacks

Jack model - ratio	Reducer ratio	Max input speed (rpm)	Travel rate @ 1725 rpm (in/min)	Dynamic load capacity per motor horsepower (lb) *						
				0.25	0.33	0.50	075	1.00	1.50	2.00
2.5-MSJ-6:1	5	1725	14.38	1530	2040	3060	4590	5000	–	–
	7.5	1725	9.58	2240	2990	4480	5000	–	–	–
	10	1725	7.19	2920	3890	5000	–	–	–	–
	15	1725	4.79	4230	5000	–	–	–	–	–
2.5-MSJ-24:1	5	1725	3.59	3640	4850	5000	–	–	–	–
	7.5	1725	2.40	5000	–	–	–	–	–	–
	10	1725	1.80	5000	–	–	–	–	–	–
	15	1725	1.20	5000	–	–	–	–	–	–
5-MSJ-6:1	5	1725	21.56	–	–	2050	3080	4100	6150	8210
	7.5	1725	14.38	–	–	3050	4570	6100	9150	10000
	10	1725	10.78	–	–	3960	5940	7930	10000	–
	15	1725	7.19	–	–	5670	8510	10000	–	–
5-MSJ-24:1	5	1725	5.39	–	–	5360	8030	–	–	–
	7.5	1725	3.59	–	–	7960	–	–	–	–
	10	1725	2.70	–	–	10000	–	–	–	–
	15	1725	1.80	–	–	10000	–	–	–	–
10-MSJ-8:1	7.5	1725	14.38	–	–	–	4550	6070	9110	12140
	10	1725	10.78	–	–	–	6010	8010	12020	16020
	15	1725	7.19	–	–	–	8610	11480	17210	20000
10-MSJ-24:1	7.5	1725	4.79	–	–	–	8940	11920	17880	–
	10	1725	3.59	–	–	–	11800	15730	20000	–
	15	1725	2.40	–	–	–	16900	20000	–	–
15-MSJ-8:1	7.5	1725	14.38	–	–	–	4220	5620	8440	11250
	10	1725	10.78	–	–	–	5570	7420	11130	14840
	15	1725	7.19	–	–	–	7970	10630	15950	21260
15-MSJ-24:1	7.5	1725	5.99	–	–	–	7880	10500	15750	–
	10	1725	3.59	–	–	–	10390	13850	20780	–
	15	1725	2.40	–	–	–	14880	19850	29770	–
20-MSJ-8:1	7.5	1725	14.38	–	–	–	–	–	7990	10650
	10	1725	10.78	–	–	–	–	–	10520	14030
	15	1725	7.19	–	–	–	–	–	15240	20320
20-MSJ-24:1	7.5	1725	4.79	–	–	–	–	–	15940	21250
	10	1725	3.59	–	–	–	–	–	20990	27990
	15	1725	2.40	–	–	–	–	–	30410	40000

* Full nominal static capacity of jack is retained

Accessories - Right-Angle Reducers

NEMA Frame Motor Mounts for Right-Angle Reducers

Jack size (ton)	Nema frame	Dimensions (in)											
		A	B	C	D	E	F	G	H	J	K	L	M
2.5	56C	5.63	7.60	1.75	3.15	2.81	1.58	5.12	0.43	6.50	0.22	3.19	1.97
5	56C	7.59	10.09	2.19	3.54	3.31	1.97	5.90	0.43	6.50	0.11	4.40	2.36
10, 15	56C / 140TC	9.22	11.92	2.60	4.13	4.02	2.46	6.96	0.43	6.50	0.55	3.62	2.83
20	56C / 140TC	9.67	12.56	2.88	4.96	4.69	2.95	8.35	0.43	6.50	0.10	2.60	3.38

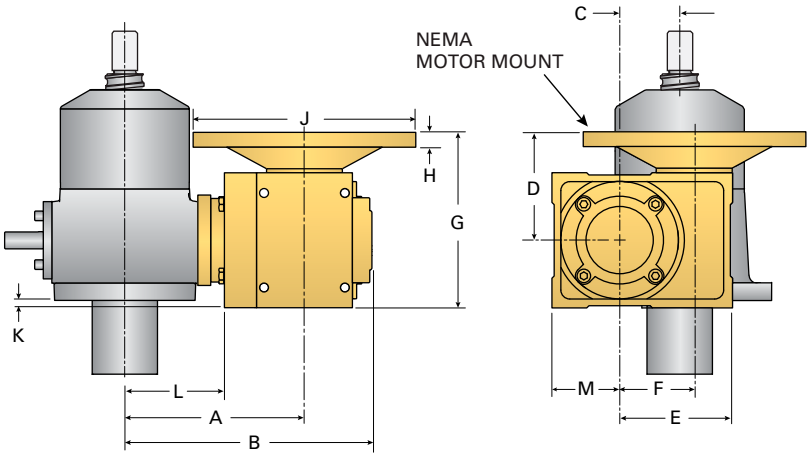

Right-Angle Reducer Mounting Positions

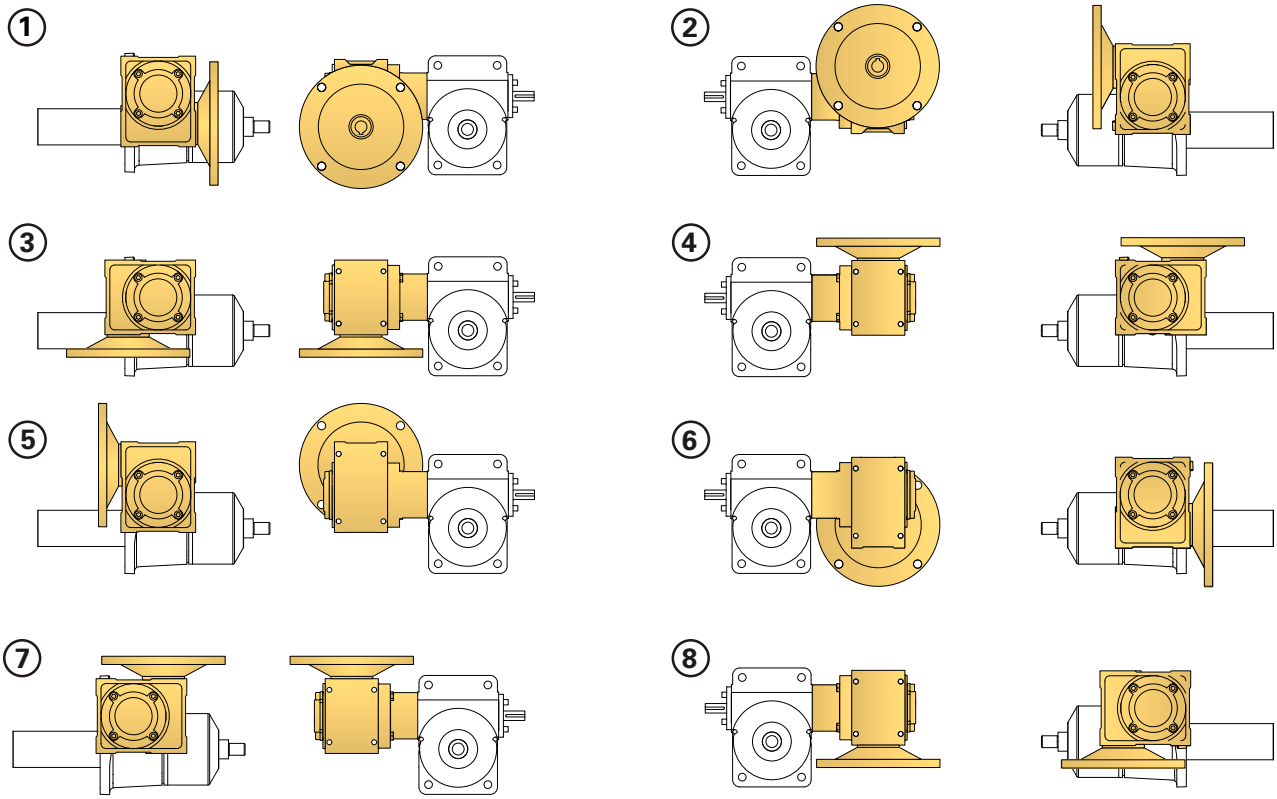

Accessories - Right-Angle Reducers

Standard-Efficiency Right-Angle Reducers

The standard-efficiency right-angle reducer is a compact, high-quality worm gear reducer enclosed in a ductile iron housing. The reducer mounts directly to the input side of the jack. Motors mount quill-style to a standard NEMA C-face. Consult the data charts for jack capacity when a right-angle reducer is used. Ratings given on the chart may differ when a right-angle reducer is installed on keyed or anti-backlash machine screw jack models. Special consideration must be given when installing onto a double-clevis jack due to the additional weight of the reducer.

How to Order a Right-Angle Reducer

Right-angle reducer ratio, mounting position, and brake motor size and type must be specified. The data chart below gives order codes for right-angle reducers with and without brake motors. Insert the order code and mounting position as shown on page 19, 55 and 85.

Example
2.5-BSJ-U 6:1 / 2CA-2 / **05LTR6** - **4** / FT / 24.5 / S

05LTR6 = product code

4 = mounting position (see page 101)

Standard Efficiency Right-Angle Reducers for Ball Screw Jacks

Jack model - ratio	Reducer ratio	Travel rate @ 1725 rpm (in/min)	Brake motor (hp)	Dynamic capacity (lbs) *	Product code **			Motor size	Reducer dimensions (in)								
					W/1-Ph motor	W/3-Ph motor	Without motor		A	B	C	D	E	F	G	H	J
2.5-BSJ-6:1	6:1	12.00	0.5	5000	05BSR6	05RTR6	X05R6	56C	5.63	7.44	5.44	3.69	3.31	1.750	5.88	0.50	6.69
	12:1	5.99	0.33	5000	03BSR12	03RTR12	X05R12	56C	5.63	7.44	5.44	3.69	3.31	1.750	5.88	0.50	6.69
2.5-BSJ-24:1	6:1	2.99	0.25	5000	02BSR6	02RTR6	X05R6	56C	5.63	7.44	5.44	3.69	3.31	1.750	5.88	0.50	6.69
	12:1	1.48	0.25	5000	02BSR12	02RTR12	X05R12	56C	5.63	7.44	5.44	3.69	3.31	1.750	5.88	0.50	6.69
2.5HL-BSJ-6:1	6:1	47.90	1	3550	10BSR6	10RTR6	X05R6	56C	5.63	7.44	5.44	3.69	3.31	1.750	5.88	0.50	6.69
	12:1	24.00	1	5000	10BSR12	10RTR12	X05R12	56C	5.63	7.44	5.44	3.69	3.31	1.750	5.88	0.50	6.69
5-BSJ-6:1	6:1	22.70	1	7500	10BSR6	10RTR6	X05R6	56C	6.50	8.50	5.88	3.69	3.31	1.750	5.88	0.50	6.69
	12:1	11.30	1	10000	10BSR12	10RTR12	X05R12	56C	6.50	8.50	5.88	3.69	3.31	1.750	5.88	0.50	6.69
5-BSJ-24:1	6:1	5.67	1	10000	10BSR6	10RTR6	X05R6	56C	6.50	8.50	5.88	3.69	3.31	1.750	5.88	0.50	6.69
	12:1	2.83	0.5	10000	05BSR12	05RTR12	X05R12	56C	6.50	8.50	5.88	3.69	3.31	1.750	5.88	0.50	6.69
5HL-BSJ-6:1	6:1	47.90	1	3500	10BSR6	10RTR6	X05R6	56C	6.50	8.50	5.88	3.69	3.31	1.750	5.88	0.50	6.69
5HL-BSJ-24:1	6:1	12.00	1	8000	10BSR6	10RTR6	X05R6	56C	6.50	8.50	5.88	3.69	3.31	1.750	5.88	0.50	6.69
10-BSJ-8:1	6:1	17.00	1	9000	10BSR6	10RTR6	X05R6	56C	7.25	9.25	6.29	3.69	3.31	1.750	5.88	0.50	6.69
	12:1	8.50	1	15000	10BSR12	10RTR12	X05R12	56C	7.25	9.25	6.29	3.69	3.31	1.750	5.88	0.50	6.69
10-BSJ-24:1	6:1	5.67	1	17000	10BSR6	10RTR6	X05R6	56C	7.25	9.25	6.29	3.69	3.31	1.750	5.88	0.50	6.69
	12:1	2.83	1	20000	10BSR12	10RTR12	X05R12	56C	7.25	9.25	6.29	3.69	3.31	1.750	5.88	0.50	6.69
10HL-BSJ-8:1	6:1	35.90	1	4275	10BSR6	10RTR6	X05R6	56C	7.25	9.25	6.29	3.69	3.31	1.750	5.88	0.50	6.69
20-BSJ-8:1	8:1	13.50	3	35000	N/A	30RTR8	X18R8	180TC	9.00	11.75	9.00	6.12	5.38	2.875	9.00	0.88	9.12
20-BSJ-24:1	8:1	4.49	2	40000	N/A	20RTR8	X18R8	180TC	9.00	11.75	9.00	6.12	5.38	2.875	9.00	0.88	9.12
20HL-BSJ8:1	8:1	26.90	5	30000	N/A	50RTR8	X18R8	180TC	9.00	11.75	9.00	6.12	5.38	2.875	9.00	0.88	9.12
20HLBSJ-24:1	8:1	8.98	3	35000	N/A	30RTR8	X18R8	180TC	9.00	11.75	9.00	6.12	5.38	2.875	9.00	0.88	9.12

* Full nominal static capacity of jack is retained.
** Motor specified is internally wired brake motor, for additional motor options see page 101.

Accessories - Right-Angle Reducers

Standard Efficiency Right-Angle Reducers for Machine Screw Jacks

Jack model - ratio	Reducer ratio	Travel rate @ 1725 rpm (in/min)	Brake motor (hp)	Dynamic capacity (lbs) *	Product code			Motor size	Reducer dimensions (in)								
					W/1-Ph motor	W/3-Ph motor	Without motor		A	B	C	D	E	F	G	H	J
2.5-MSJ-6:1	6:1	12.00	0.75	5000	07BSR6	07RTR6	X05R6	56C	5.63	7.44	5.44	3.69	3.31	1.750	5.88	0.50	6.69
	12:1	5.99	0.50	5000	05BSR12	05RTR12	X05R12	56C	5.63	7.44	5.44	3.69	3.31	1.750	5.88	0.50	6.69
2.5-MSJ-24:1	6:1	2.99	0.33	5000	03BSR6	03RTR6	X05R6	56C	5.63	7.44	5.44	3.69	3.31	1.750	5.88	0.50	6.69
	12:1	1.48	0.33	5000	03BSR12	03RTR12	X05R12	56C	5.63	7.44	5.44	3.69	3.31	1.750	5.88	0.50	6.69
5-MSJ-6:1	6:1	18.00	1	4500	10BSR6	10RTR6	X05R6	56C	6.50	8.50	5.88	3.69	3.31	1.750	5.88	0.50	6.69
	12:1	8.98	1	5000	10BSR12	10RTR12	X05R12	56C	6.50	8.50	5.88	3.69	3.31	1.750	5.88	0.50	6.69
5-MSJ-24:1	6:1	4.49	1	10000	10BSR6	10RTR6	X05R6	56C	6.50	8.50	5.88	3.69	3.31	1.750	5.88	0.50	6.69
	12:1	2.25	1	10000	10BSR12	10RTR12	X05R12	56C	6.50	8.50	5.88	3.69	3.31	1.750	5.88	0.50	6.69
10-MSJ-8:1 15-MSJ-8:1	6:1	18.00	1	3800	10BSR6	10RTR6	X05R6	56C	7.25	9.25	6.29	3.69	3.31	1.750	5.88	0.50	6.69
	12:1	8.98	1	6275	10BSR12	10RTR12	X05R12	56C	7.25	9.25	6.29	3.69	3.31	1.750	5.88	0.50	6.69
10-MSJ-8:1 15-MSJ-8:1	6:1	5.99	1	7000	10BSR6	10RTR6	X05R6	56C	7.25	9.25	6.29	3.69	3.31	1.750	5.88	0.50	6.69
	12:1	2.99	1	10000	10BSR12	10RTR12	X05R12	56C	7.25	9.25	6.29	3.69	3.31	1.750	5.88	0.50	6.69
20-MSJ-8:1	8:1	13.50	7.5	31000	N/A	75RTR8	X21R8	210TC	9.00	11.75	9.00	6.12	5.38	2.875	9.00	0.88	9.12
	8:1	13.50	5	22500	N/A	50RTR8	X18R8	180TC	9.00	11.75	9.00	6.12	5.38	2.875	9.00	0.88	9.12
20-MSJ-24:1	8:1	4.49	3	25000	N/A	30RTR8	X18R8	180TC	9.00	11.75	9.00	6.12	5.38	2.875	9.00	0.88	9.12

* Full nominal static capacity of jack is retained.

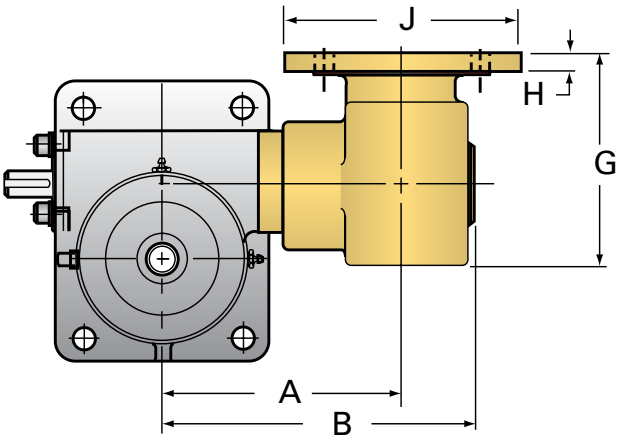

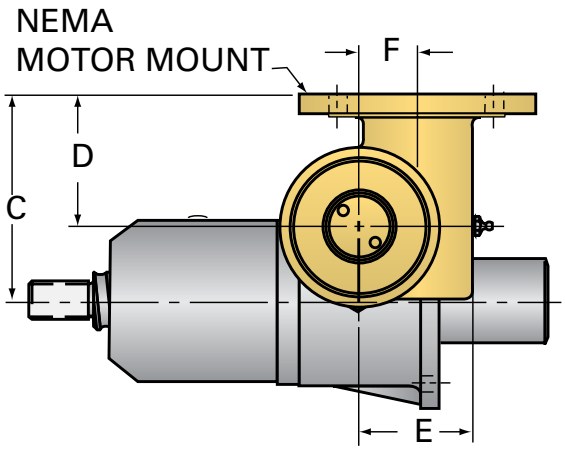

Accessories - Brake Motors

ActionJac™ worm gear screw jacks can be supplied with an industrial-quality brake motor that includes a spring-actuated, electrically released braking mechanism, which will hold a load when the power is off. In normal operation, power is applied and removed to the motor windings and brake release simultaneously. If it is desired to operate the brake separately, as when used with a speed control, the brake needs to be wired externally. Motors provided by Thomson can either be supplied with the brake wired externally to accommodate speed controllers, or internally for simplicity of use.

Standard motors are: 3-phase 208-230 / 460 Vac, 60 Hz. 1,725 rpm. Also available are single-phase motors at: 115 / 230 Vac, 60 Hz. 1,725 rpm. Standard 3-phase and single-phase motors are rated for 50% duty. Wash down and explosion-proof motors are rated for continuous duty.

How to Order

See page 96.

Brake Motors

Motor power (hp)	Externally wired brake						Internally wired brake	
	Standard motor 208-230/460 Vac, 3PH		Wash down motor IP55 208-230/460 Vac, 3PH		Explosion proof motor Division1, Class 1,2, Group F, G 208/230/460 Vac, 3PH		Single phase motor 115/230 Vac, 1PH	
	Motor product code	Brake torque (ft-lbs)	Motor product code	Brake torque (ft-lbs)	Motor product code	Brake torque (ft-lbs)	Motor product code	Brake torque (ft-lbs)
1/3	03LT	3	03LW	3	–	–	03LS	3
1/2	05LT	3	05LW	3	05RE	3	05LS	3
3/4	O7LT	6	07LW	6	07RE	6	07LS	6
1	10LT	6	10LW	6	10RE	6	10LS	3
1 1/2	15LT	6	15LW	10	–	–	15LS	3
2	20LT	10	20LW	10	20RE	10	–	–
3	30LT	15	–	–	30RE	15	–	–
5	50LT	25	–	–	50RE	25	–	–
7 1/2	75LT	35	–	–	–		–	–

Accessories - Handbrakes

A handbrake is a convenient solution for manually securing machine screw jacks. Handbrakes can be used on machine screw jacks from 2.5 to 5 ton capacity. Handbrakes can be ordered with either a standard shaft extension, an extended shaft extension, or with a handwheel. See page 122 for handwheel details.

Handbrake Kits

Handbrake kits come with handbrake, adjustable handle, two-socket head cap screw (SHCS), and two lock washers. To install, remove two adjacent SHCS and lock washers, securing the end cap. Discard SHCS and lock washers. Clean shaft of any debris or contamination. Slide the handbrake over the shaft until fully against the end cap. Install the provided SHCS and lock washers in place of the two that were removed, securing the handbrake and end cap in place.

Handbrake Kits

Jack size	Kit p/n
2.5	HB-025
5	HB-050

Handbrake Safety Note

Handbrakes are intended to prevent "creep" due to vibration with machine screw jacks only. They are not designed to be used with ball screw jacks. Depending on the magnitude of vibration and application life cycles, the handbrake may not be sufficient to secure the load. Handbrakes are not intended to be used where personal injury could occur.

How to Order a Jack with a Handbrake

Example

2.5-MSJ-U 6:1 / **HBT** - **1** / / SSE-3 FT / 12.0 / S

HBT = handbrake with extended shaft extension

1 = handbrake in position 1

Handbrake Product Codes

Code	shaft extension
HBE	standard shaft extension
HBT	extended shaft extension
HBA	with 4" handwheel*
HBB	with 6" handwheel*
HBC	with 8" handwheel*
HBD	with 10" handwheel*

* See handwheel page 122 to select the correct size for jack model

Shaft Extension

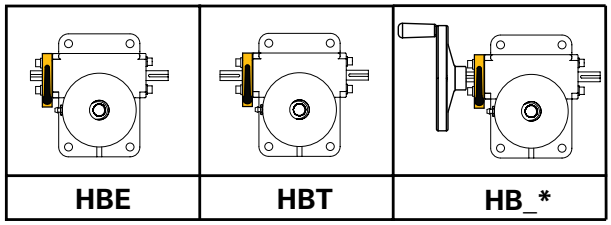

Handbrake Positions

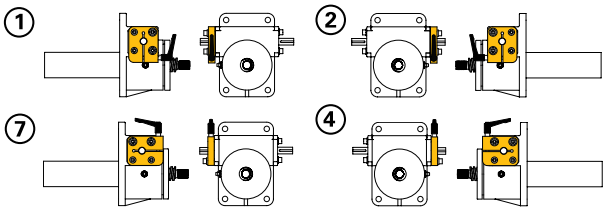

Accessories - Standard Miter Gear Assemblies

Jacks may be used in multiple arrangements by connecting shafting, couplings and gear boxes to simultaneously transmit power to the input shafts of the jacks. Thomson provides gearboxes for use with jacks. Make certain that the total torque and horsepower required by the arrangement does not exceed the ratings of the miter gearbox. For optimum life and noise levels, operate below 900 rpm. Higher speeds are permissible at lower torque ratings. Noise levels may increase at higher speeds. The operating efficiency of a miter gear box is 90%.

Gears are forged alloy steel. Shafts are stress-proof steel ground and polished. Clockwise (CW) and counterclockwise (CCW) notations indicate direction of shaft rotation when facing outer end of shaft. All shaft arrangements will operate opposite direction for that shown. To order, specify model number and desired shaft arrangement.

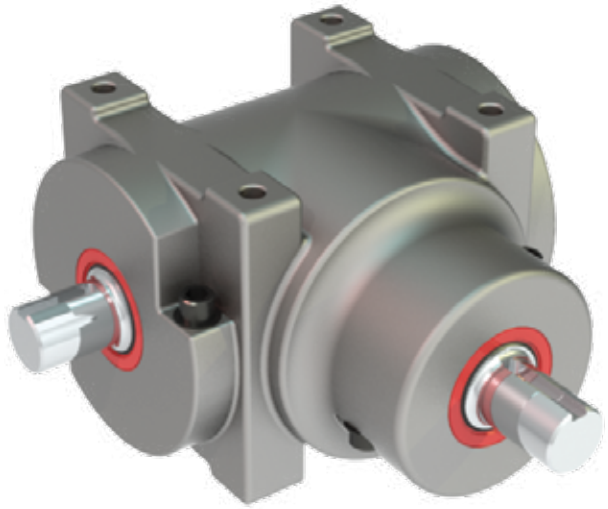

Miter Gear Assemblies

Model	Gear ratio	Rated load @ 1750 rpm				Est. weight (lb)
		Continuous duty		Intermittent duty*		
		HP	Torque (in-lb)	HP	Torque (in-lb)	
GB210	1:1	7.7	284	14.4	535	6.25
GB165	1:1	29.0	1047	37.0	1338	25.00
	1.5:1	14.0	755	17.4	935	25.00
	2:1	10.7	733	14.0	1012	25.00
GB600	1:1	61.5	2213	79.2	2853	48.00
	1.5:1	29.5	1593	37.0	2003	48.00
	2:1	16.0	1160	21.3	1534	48.00

* 30 % duty cycle.

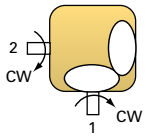

TYPE B

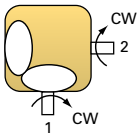

TYPE C

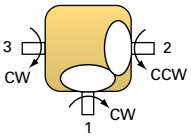

TYPE D

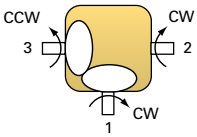

TYPE E

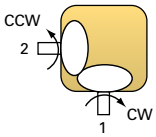

TYPE F

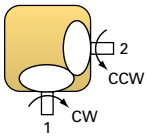

TYPE G

Accessories - Standard Miter Gear Assemblies

GB210

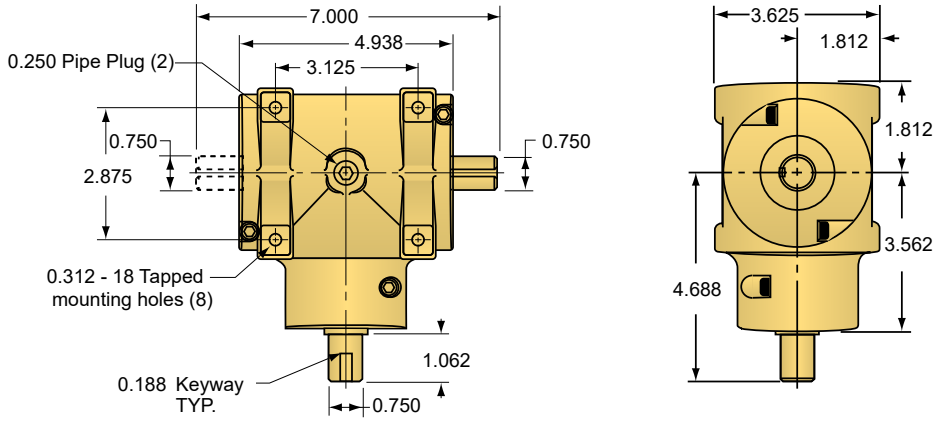

GB165

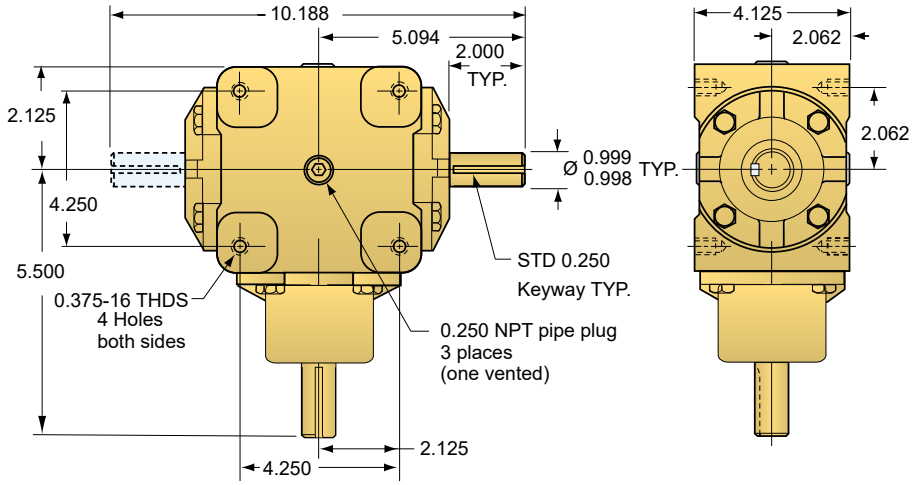

GB600

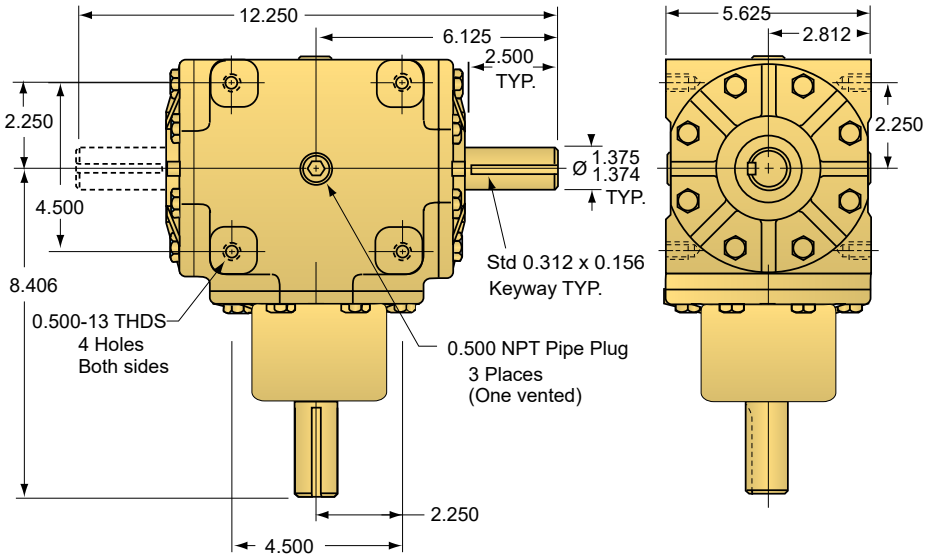

GB210 are filled with EP-90 gear lubricant at time of shipment. GB165 and GB600 are shipped dry. Fill with EP-90 gear lubricant. GB165 = 1 pint, GB600 = 2 pints.

Accessories - LinkJac™ Shafting

ActionJac™ LinkJac shafting is used to interconnect the input shafts of ActionJac worm gear screw jacks used in a multiple arrangement. The shafts transfer the torque from the motor to the jack or from jack to jack. LinkJac is available in lengths up to 144 inches.

Selection

There are two major concerns when selecting shafting:
Critical speed: How fast will the shaft be turning?
Torsional twist: How much torque will the shaft be transmitting?

The two characteristics of LinkJac shafting that can be varied to accommodate these requirements are:

- Length of the shaft
- Diameter of the shaft

When selecting LinkJac shafting, use the largest diameter or shortest length, which satisfies both of the following equations.

Critical Speed

The speed that excites the natural frequency of the shaft is referred to as the critical speed. Since the speed can also be affected by shaft straightness and assembly alignment, it is recommended that the maximum speed be limited to 80% of the calculated critical speed value. The theoretical formula to calculate critical speed in rpm is:

$$N_{Speed} = 0.6192 \times (3.14 / L)^2 \times Cs$$

N = Critical speed in revolutions per minute
L = Length of unsupported shaft in inches
Cs = Value list from table on next page

Radial support bearings may be needed in order to accommodate the required input rpm. See pages 124 - 125 for radial support bearing selection.

Torsional Twist

The degree of twist experienced by LinkJac shafting when a given amount of torque is applied. To ensure proper synchronization of ActionJac motion, it is recommended not to exceed 1° of twist. The theoretical formula to calculate torsional twist in degrees is:

$$N_{Twist} = T \times L / Ct$$

N = Torsional twist in degrees
L = Length of shaft in inches
Ct = Value list from table on next page
T = Torque

Design Information

The length used in the previously listed formulas is the unsupported length of the shaft. If support bearings are used on the shaft, the length is the longest unsupported length between bearings.The previously listed formulas give a theoretical value of critical speed and torsional twist. Alignment, straightness and stiffness of the system all contribute to determining the actual value. The torque in the system is also limited by the torque capacity of the coupling. Allow appropriate spacing between the jack input shaft and the LinkJac shafting inside the coupling. For some combinations of couplings and jacks, the radius of the suggested coupling is larger than the distance from the center of the worm shaft to the base. Thomson offers a range of couplings for use with LinkJac line shafting or tubular shafting and ActionJac products in both floating shaft and supported shaft applications. See pages 110 - 111 for more information.

Accessories - LinkJac Shafting

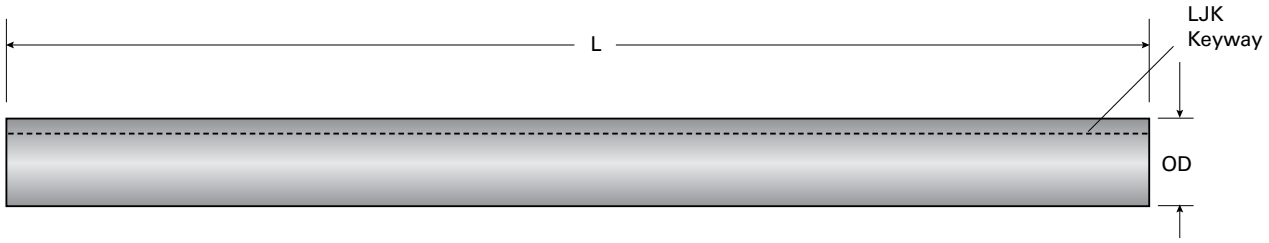

Inch Line Shaft

Inch line shaft	OD (in)	Keyway (in)	Keyway length (in)	A	B	Material	Ct	Cs	Weight/in (lb)
LJ-8	0.500/0.4980	-	-	-	-	steel	1235	3.895×10^5	0.056
LJ-12	0.750/0.0748	-	-	-	-	steel	6250	5.851×10^5	0.125
LJ-16	1.000/0.9980	-	-	-	-	steel	19500	1.168×10^6	0.223
LJ-24	1.500/1.4980	-	-	-	-	steel	95000	1.169×10^6	0.502
LJK-8	0.500/0.4980	0.12 × 0.06	full length	-	-	steel	1235	3.895×10^5	0.056
LJK-12	0.750/0.7480	0.19 × 0.09	full length	-	-	steel	6250	5.851×10^5	0.125
LJK-16	1.000/0.9980	0.25 × 0.12	full length	-	-	steel	19500	1.168×10^6	0.223
LJK-24	1.500/1.4980	0.38 × 0.19	full length	-	-	steel	95000	1.169×10^6	0.502

Accessories - Flexible Couplings

Jacks used alone or in multiple arrangements require couplings to transmit power to the input shaft. Thomson provides jaw-type and flex-type couplings for use with jacks. The selection process for couplings includes the following steps:

1. Refer to the jack specification tables to determine torque requirements per jack for your application.
2. Determine total coupling capacity required by multiplying the torque required per jack by the number of jacks to be driven by the coupling.
3. Check the torque required against maximum torque rating as shown in the table. Select a coupling with a maximum torque greater than the application torque.
4. If using flex-type couplings, full-flex couplings should be used for close-coupled arrangements. For floating shaft applications, use two Flex-Rigid couplings. The rigid half should be mounted on the floating shaft.

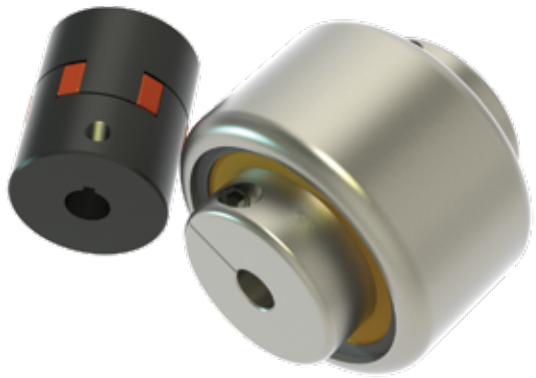

All jacks, shafts, couplings and motors should be carefully aligned for maximum performance. Couplings with bores other than those specified are available upon request.

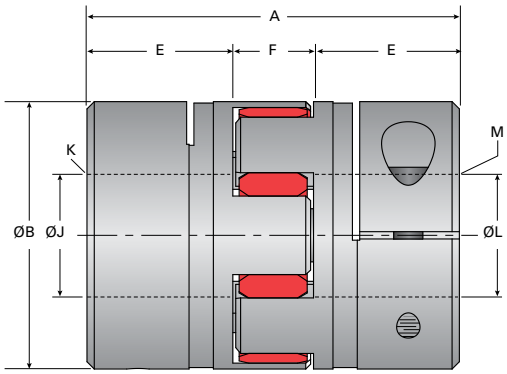

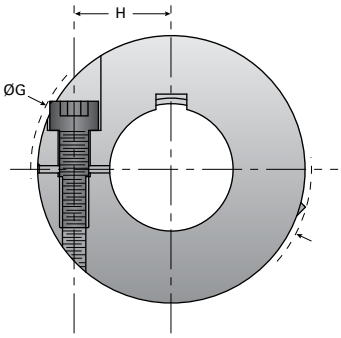

Jaw Type Series

Product Code	Max. torque rating (in-lb)	Approx. weight (lb)	Clamp bolt torque (in-lb)	Coupling dimensions (in)						Bore sizes (in)			
				A	B	E	F	G	H	J	Keyway K	L	Keyway M
C-3020-01	111	0.10	12	1.38	1.18	0.43	0.51	1.27	0.45	0.375	1/8 × 1/16	0.375	1/8 × 1/16
C-3025-01	150	0.30	93	2.60	1.57	0.98	0.63	1.81	0.57	0.500	1/8 × 1/16	0.500	1/8 × 1/16
C-3025-05	150	0.30	93	2.60	1.57	0.98	0.63	1.81	0.57	0.500	1/8 × 1/16	0.625	3/16 × 3/32
C-3025-02	150	0.30	93	2.60	1.57	0.98	0.63	1.81	0.57	0.500	1/8 × 1/16	0.750	3/16 × 3/32
C-3025-03	150	0.30	93	2.60	1.57	0.98	0.63	1.81	0.57	0.625	3/16 × 3/32	0.625	3/16 × 3/32
C-3025-04	150	0.30	93	2.60	1.57	0.98	0.63	1.81	0.57	0.625	3/16 × 3/32	0.750	3/16 × 3/32
C-3025-06	150	0.30	93	2.60	1.57	0.98	0.63	1.81	0.57	0.750	3/16 × 3/32	0.750	3/16 × 3/32
C-3030-01	531	0.62	93	3.07	2.17	1.18	0.71	2.26	0.79	0.750	3/16 × 3/32	1.000	1/4 × 1/8
C-3030-02	531	0.62	93	3.07	2.17	1.18	0.71	2.26	0.79	1.000	1/4 × 1/8	1.000	1/4 × 1/8

Accessories - Flexible Couplings

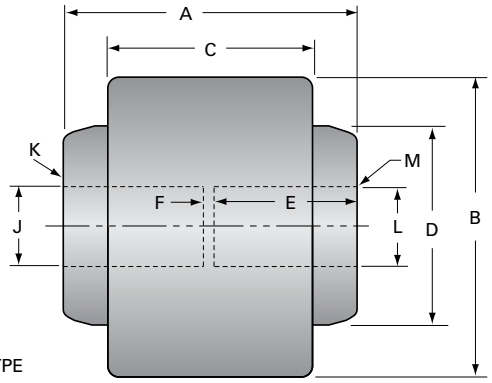

FLEX TYPE

Heavy Duty Series

Product Code		Max. torque rating (in-lb)	Approx. weight (lb)	Clamp bolt torque (in-lb)	Coupling dimensions (in)						Bore sizes (in)			
Full flex	Flex-rigid				A	B	E	F	G	H	J	Keyway K	L	Keyway M
C-1800-04	C-1805-04	2500	5	3.125	3.31	2.00	2.000	1.50	0.125	0.4995 0.4990	1/8 × 1/16	0.7495 0.7490	3/16 × 3/32	1/8 × 1/16
C-1800-01	C-1805-01	2500	5	3.125	3.31	2.00	2.000	1.50	0.125	0.4995 0.4990	1/8 × 1/16	0.9995 0.9990	1/4 × 1/8	1/8 × 1/16
C-1800-05	C-1805-05	2500	5	3.125	3.31	2.00	2.000	1.50	0.125	0.7495 0.7490	3/16 × 3/32	0.7495 0.7490	3/16 × 3/32	3/16 × 3/32
C-1800-02	C-1805-02	2500	5	3.125	3.31	2.00	2.000	1.50	0.125	0.7495 0.7490	3/16 × 3/32	0.9995 0.9990	1/4 × 1/8	3/16 × 3/32
C-1800-03	C-1805-03	2500	5	3.125	3.31	2.00	2.000	1.50	0.125	0.9995 0.9990	1/4 × 1/8	0.9995 0.9990	1/4 × 1/8	3/16 × 3/32
C-1810-01	C-1815-01	7500	8	3.750	3.75	2.53	2.375	1.82	0.125	1.2495 1.2490	1/4 × 1/8	1.2495 1.2490	1/4 × 1/8	3/16 × 3/32
C-1810-02	C-1815-02	7500	8	3.750	3.75	2.53	2.375	1.82	0.125	1.3745 1.3740	5/16 × 5/32	1.2495 1.2490	1/4 × 1/8	3/16 × 3/32
C-1810-03	C-1815-03	7500	8	3.750	3.75	2.53	2.375	1.82	0.125	1.4995 1.4990	3/8 × 3/16	1.2495 1.2490	1/4 × 1/8	1/4 × 1/8

To maximize life, it is recommended that gears be lubricated at installation.

Economy Series

Product Code		Max. torque rating (in-lb)	Approx. weight (lb)	Clamp bolt torque (in-lb)	Coupling dimensions (in)						Bore sizes (in)			
Full flex	Flex-rigid				A	B	C	D	E	F	J	Keyway K	L	Keyway M
P-2200-288	-	210	0.37	2.13	1.89	1.46	1.26	0.98	0.16	0.500	0.500	1/8 × 1/16	0.500	1/8 × 1/16
P-2200-185	-	210	0.37	2.13	1.89	1.46	1.26	0.98	0.16	0.500	0.500	1/8 × 1/16	0.750	1/8 × 1/16
P-2200-193	-	210	0.37	2.13	1.89	1.46	1.26	0.98	0.16	0.625	0.625	3/16 × 3/32	0.750	3/16 × 3/32
P-2200-196	-	260	0.71	2.20	2.05	1.61	1.42	1.02	0.16	0.625	0.625	3/16 × 3/32	0.750	3/16 × 3/32
P-2200-178	-	210	0.37	2.13	1.89	1.46	1.26	0.98	0.16	0.750	0.750	3/16 × 3/32	0.750	3/16 × 3/32
P-2200-182	-	260	0.71	2.20	2.05	1.61	1.42	1.02	0.16	0.750	0.750	3/16 × 3/32	0.750	3/16 × 3/32
P-2200-183	-	610	1.64	3.31	2.60	1.81	1.73	1.57	0.16	0.750	0.750	3/16 × 3/32	1.000	3/16 × 3/32
P-2200-191	-	610	1.64	3.31	2.60	1.81	1.73	1.57	0.16	0.750	0.750	3/16 × 3/32	1.125	1/4 × 1/8
P-2200-177	-	1170	3.31	3.46	3.62	1.97	2.56	1.46	0.55	1.000	1.000	1/4 × 1/8	1.000	1/4 × 1/8

Accessories - Control Panels

Thomson control panels are designed to match the motor when shipped from the factory, which reduces design time required. Enclosures are NEMA rated and are acceptable to use in most industrial environments. They are available in multiple voltage options and can be provided with or without disconnect. Control panels can be interconnected with other safety or control systems.

Note: Licensed electrician required at time of install.

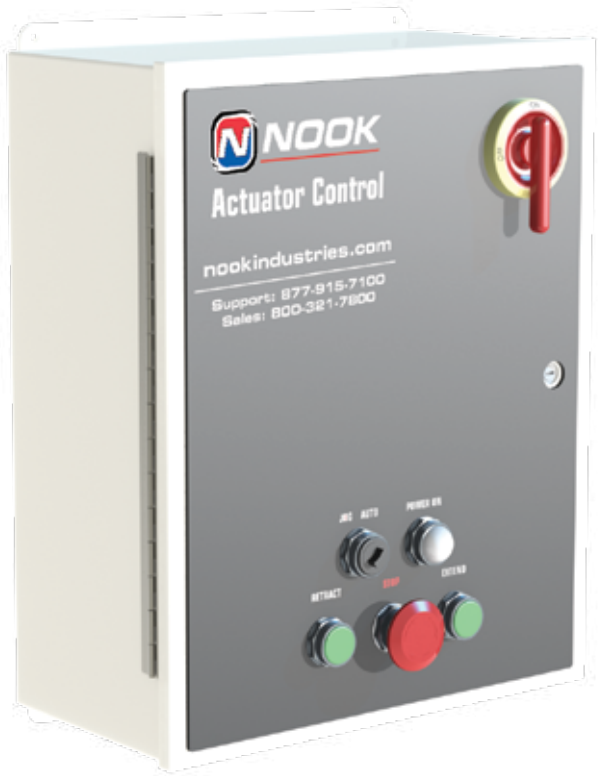

Motor Capacities

From 1⁄4 up to 15 HP 3-phase 230 - 460 - 575 Vac induction motors with or without electrically operated brakes in NEMA 4/12 enclosures.

Internal Wiring

- Per NFPA-79
- Main fuses with power disconnect models
- UL listed

Functionallity

- Front panel controls include maintained stop push-button; main power disconnect switch (optional); extend push-button; retract push-button, in auto mode, the load moves until limit is reached; in jog mode, the load moves while button is pressed.
- Front panel indicators include power indicator
- All units work with ActionJac™ limit switches, or custom-supplied mechanical limit switches

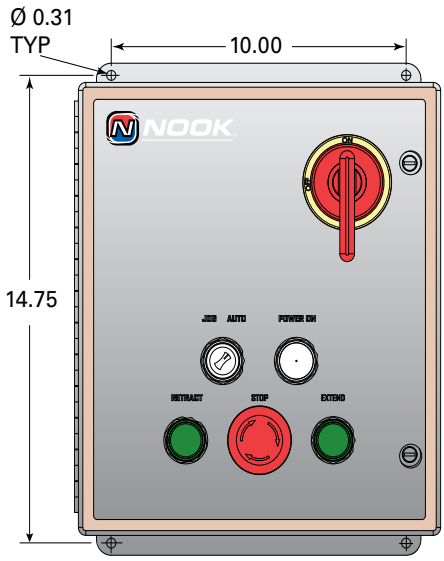

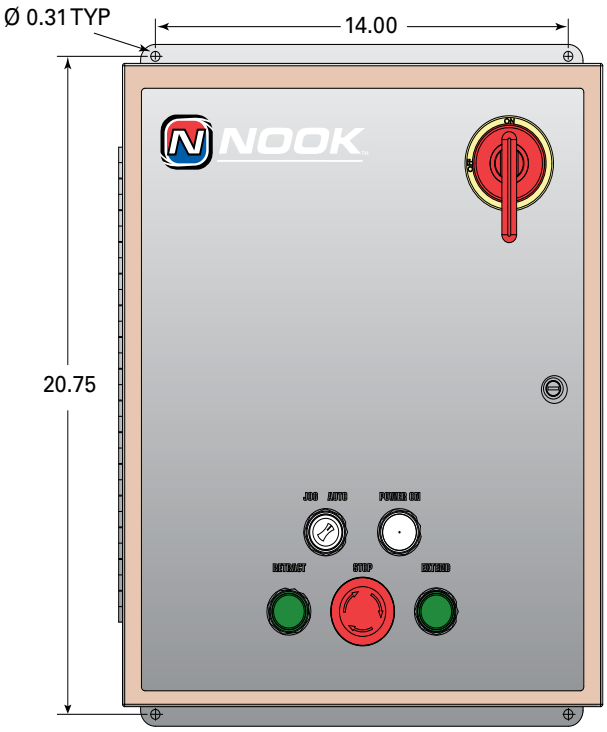

Accessories - Control Panels

Three Phase Model Numbers

Hp	Voltage (Vac)	Model number		Enclosure size (in) H × W × D
		Without power disconnect	With power disconnect	
¼	230	NCB23025	NCB23025D	14 × 12 × 8
	460	NCB46025	NCB46025D	14 × 12 × 8
⅓	230	NCB23033	NCB23033D	14 × 12 × 8
	460	NCB46033	NCB46033D	14 × 12 × 8
	575	NCB57033	NCB57033D	14 × 12 × 8
½	230	NCB23050	NCB23050D	14 × 12 × 8
	460	NCB46050	NCB46050D	14 × 12 × 8
	575	NCB57050	NCB57050D	14 × 12 × 8
¾	230	NCB23075	NCB23075D	14 × 12 × 8
	460	NCB46075	NCB46075D	14 × 12 × 8
	575	NCB57075	NCB57075D	14 × 12 × 8
1	230	NCB230100	NCB230100D	14 × 12 × 8
	460	NCB460100	NCB460100D	14 × 12 × 8
	575	NCB570100	NCB570100D	14 × 12 × 8
1½	230	NCB230150	NCB230150D	14 × 12 × 8
	460	NCB460150	NCB460150D	14 × 12 × 8
	575	NCB570150	NCB570150D	14 × 12 × 8
2	230	NCB230200	NCB230200D	14 × 12 × 8
	460	NCB460200	NCB460200D	14 × 12 × 8
	575	NCB570200	NCB570200D	14 × 12 × 8
3	230	NCB230300	NCB230300D	14 × 12 × 8
	460	NCB460300	NCB460300D	14 × 12 × 8
	575	NCB570300	NCB570300D	14 × 12 × 8
5	230	NCB230500	NCB230500D	20 × 16 × 8
	460	NCB460500	NCB460500D	14 × 12 × 8
	575	NCB570500	NCB570500D	14 × 12 × 8
7½	230	NCB230750	NCB230750D	20 × 16 × 8
	460	NCB460750	NCB460750D	20 × 16 × 8
	575	NCB570750	NCB570750D	20 × 16 × 8
10	230	NCB231000	NCB231000D	20 × 16 × 8
	460	NCB461000	NCB461000D	20 × 16 × 8
	575	NCB571000	NCB571000D	20 × 16 × 8
15	230	NCB231500	NCB231500D	20 × 16 × 8
	460	NCB461500	NCB461500D	20 × 16 × 8
	575	NCB571500	NCB571500D	20 × 16 × 8

Accessories - Rotary Limit Switch

Every motorized worm gear screw jack must be controlled so that power to the motor is turned off and the brake engaged before the limits of mechanical travel are reached. The ActionJac™ rotary limit switch senses extension shaft rotation and provides switch contact closures that can be used to control motors.

The ActionJac Rotary Limit Switch Assembly

This sturdy, durable assembly is available with two or four circuits or two circuits and a potentiometer. Each circuit has a separate rotating cam that actuates a high-quality switch. The switch actuation may be individually and infinitely adjusted anywhere within the travel of the jack. These assemblies contain gear reducers with ratios that vary according to the model and travel of the jack. Thomson selects ratios that result in maximum cam rotation for best accuracy, repeatability and minimum hysteresis. In most cases, with full travel of the actuator, the cam will rotate 3⁄8 to 7⁄8 of a revolution to actuate a switch. In the event that the cam continues to rotate, the switch returns to its original state after approximately 25° of rotation, with no damage to the limit switch assembly. The 2-circuit switch assembly is useful for limiting the maximum and minimum extension. The 4-circuit assembly gives the possibility of additional signals for other user purposes. The potentiometer version is used to provide an analog signal for sensing jack position. Single-pole double-throw (SPDT) switches are standard and double-pole double-throw (DPDT) switches are optional. These assemblies are dust protected and meet NEMA 4 and 5 standards for oil and water tightness.The ActionJac rotary limit switch assembly is mounted to the extension shaft side of the screw jack opposite the input. The rotary limit switch is available for ActionJac worm gear screw jack sizes two tons and larger. Most jack models have close and extended mounts to provide clearance around the switch housing. See the chart on the next page for dimensions. Switches are factory installed to assure proper assembly in the correct orientation for the specified mounting position.

How to Order a Rotary Limit Switch

- Product code (see table in the left column)
- Mounting position (1 through 8)
- Close or extended mount (C or E)

Insert the correct designation in the ActionJac worm gear screw jack reference number (see page 19, 55 and 85 for more information on jack reference numbers).

Example:
2.5-MSJ-U 6:1 / SSE-1 / **2CA-4E** / FT / 24.5 / S

2CA = Extension shaft designation
4E = Position and extended mount

Examples of rotary limit switch designations:
2CA-4C = Rotary limit switch, 2-circuit, SPDT, position 4, close mount
4CE-1E = Rotary limit switch, 4-circuit, DPDT, position 1, extended mount

C = Close mount on
E = Extended mount (see following page)

Note: These designation numbers are not complete part numbers. These assemblies contain gear reducers with ratios that vary according to the model and travel of the jack. If you are ordering a replacement switch assembly, complete information on the jack is required.

Note: Limit switches are not adjusted at the factory. Switches should be set during installation. Instructions for setting the limit switch are available online at www.thomsonlinear.com.

Accessories - Rotary Limit Switch

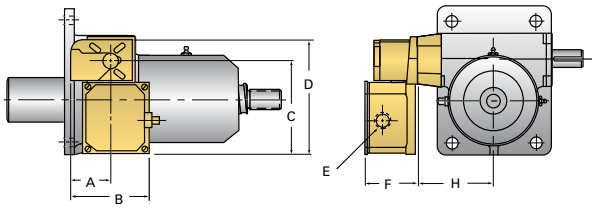

Dimensions

Circuits	Dimensions (in)					
	A	B	C	D	E	F
LS-2C 2 (2 circuit)	2.46	5.25	6.24	7.62	¾-NPT	3.25
LS-4C 4 (4 circuit)	2.46	5.25	8.24	9.62	1-NPT	3.88
LS-2PT (2 circuit with potentiometer)	2.46	5.25	8.24	9.62	1-NPT	3.88

Rotary Limit Switch Positions

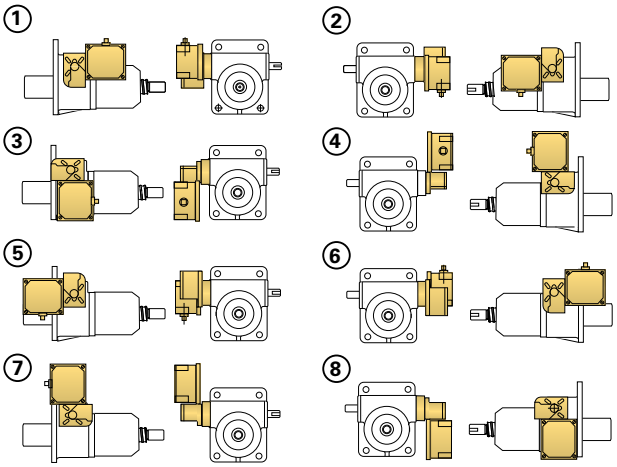

Eletrical Ratings

Switches

DC Voltage: Max. 115 Vdc, 0.5 A (SPDT) / 0.125 A (DPDT)

AC Voltage: Max. 115 Vac, 15 A (SPDT) / 10 A (DPDT)

10-turn Potentiometer

Range: 0 - 500 Ohm

Max power: 2 W

Note: While the 10-turn potentiometer is rated for 0 - 500 Ohms, as implemented in the rotary limit switch assembly, it cannot and should not operate over its full range. Minimum and maximum resistance values cannot be known until the unit is installed and final travel limit adjustments have been made, therefore, the device connected to the potentiometer should include provisions for trimming to compensate for these values.

Extension Shaft Designations

Designation	Number of circuits	Switch type	Potentiometer
2CA	2	SPDT	no
2CC	2	DPDT	no
4CA	4	SPDT	no
4CE	4	DPDT	no
PTA	2	SPDT	yes
PTC	2	DPDT	yes

Mount Data

Model	Dim. H Close mount (in)	Dim. H Ext. mount (in)	Close mount positions	Extended mount positions
2-BSJ, MSJ	-	3.56	-	all
2R, 2.5-BSJ, MSJ	2.75	3.56	all	all
3-BSJ	-	3.56	-	all
5-BSJ, MSJ	3.56	4.56	all	all
10, 15-BSJ, MSJ	3.88	5.56	all	all
20-BSJ, MSJ	4.41	5.81	all	all
30, 35-MSJ	5.25	7.06	all	all
50-BSJ, MSJ	6.25	11.06	1, 2 ,4, 7	all
75-BSJ, MSJ	7.25	12.06	all	all
100-BSJ, MSJ	8.25	12.00	1, 2, 4, 7	all

Wiring Diagrams

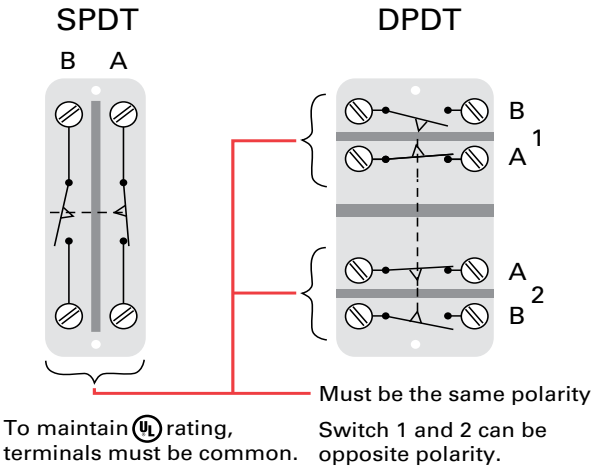

Accessories - Sensor System

The sensor system is maintenance free and easy to adjust. Just position the lift shaft in the correct position, loosen the locking screw, and slide the movable sensor to the desired location until the sensor indicates a response. The sensor system is supplied with three slots in the stem cover and two normally closed PNP or NPN sensors. Additional sensors can be added or moved to any of the three slots. It is also possible to add multiple sensors to the same slot.

How to Order a Sensor System

Example:
2.5-MSJ-U 6:1 / SSE-1 / SSE-2 / FT / 8 / PS

P = PNP
N = NPN

Proximity Sensor Data

Maximum screw jack operating speed: 60 in/min
Repeatability: up to ± 0.004 in (0.1 mm)
Supply voltage: 24 Vdc
Contact type: normally closed
Signal outpout type: available as PNP or NPN
Connections: three wire system (+24 Vdc, O Vdc, signal ouput)

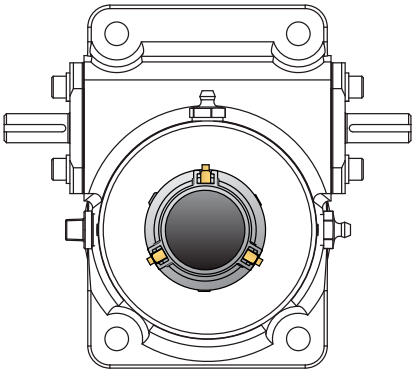

Inch Screw Jack Models

Model	A (in)	B (in)	Sensor bandwidth (in)
05-BSJ + all Mini Jacks	2.83	1.88	0.33
1-BSJ, 1-MSJ	2.83	1.88	0.33
2-BSJ, 2-MSJ	2.83	2.25	0.33
2.5-BSJ, 2.5-MSJ	2.83	2.25	0.33
5-MSJ	3.19	3.38	0.50
5-BSJ-I, 5HL-BSJ-I	3.19	3.38	0.50
5-BSJ-U, 5HL-BSJ-U	3.56	3.38	0.50
10-MSJ	3.83	3.38	0.50

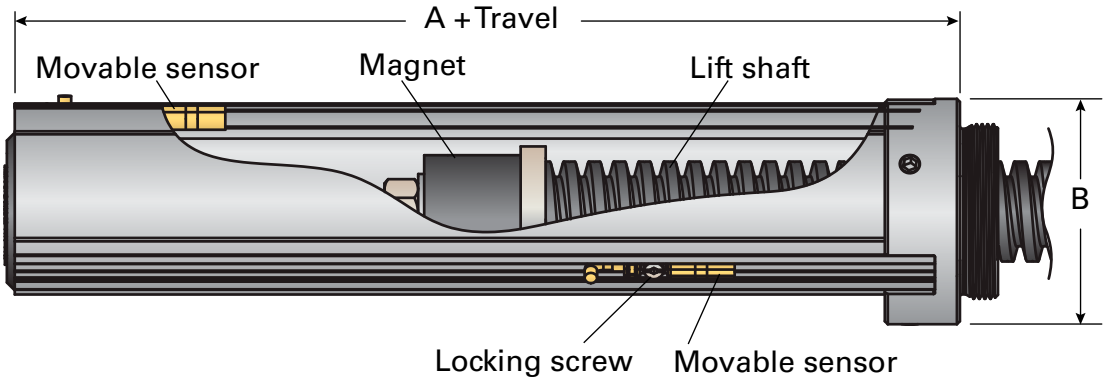

Accessories - In-Line Encoder

For precise position sensing at the input shaft, an ActionJac™ in-line encoder option may be factory installed between the motor and motor adapter or right-angle reducer. This low-cost option requires minimal space, leaving the extension shaft side of the jack free for clearance, a rotary limit switch, or coupling to another jack. The in-line encoder's quadrature output design allows detection of both speed and direction of shaft rotation. The ActionJac in-line encoder option requires an optional motor mount or right-angle reducer.

Encoder Data

Sensing speed range: 0 - 1 0000 rpm
Pulse output: 60 pulses/revolution
Supply voltage: +5 to 24 Vdc +/- 5%
Supply current: 60 mA typical, 115 mA max.
Output drive capability: 250 mA/channel continuous
Maximum load: 50 ohms/channel

The encoder mounted between the motor and motor mount will offset the length of the motor according to the table below.

How to Order an In-Line Enoder

Specify the worm gear screw jack reference number, using the system described on pages 19, 55 and 85.

Example:
2.5-MSJ-U 6:1 / 10LT-1 / 2CA-4E / FT / 24.5 / **E**S

E = encoder

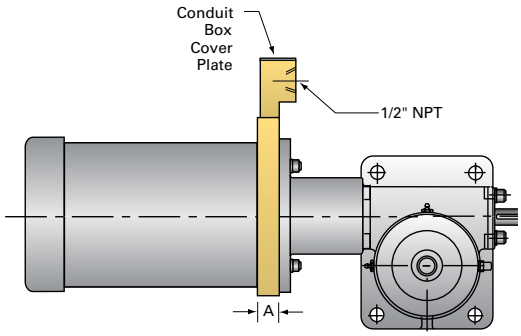

Encoder Frame Size	
NEMA frame size	A (in)
56C, 140TC	0.61
180TC, 210TC	0.88

Electrical Connections

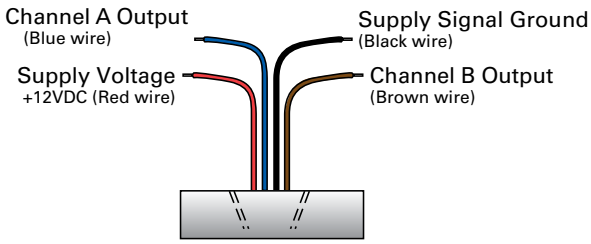

Output Channels

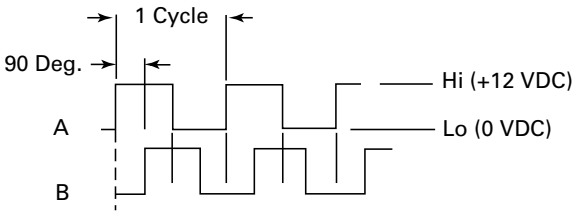

Output Channel Schematic

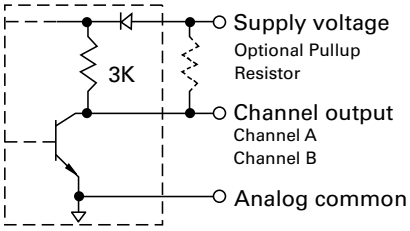

Accessories - Counters

For precise position display, a range of digital position indicators are available for use with ActionJac™ worm gear screw jacks. These indicators measure the rotation of the input shaft and display a corresponding position in a counter window. The display value per input shaft revolution is variable and achieved through a series of gear reductions configured to accommodate different jack ratios, lift shaft leads and travel distances. Not for use with motorized applications. Long travel may result in counter "rolling over". Some jack configurations may have limited travel.

How to Order a Counter

- Determine mounting position
- Count increase or decrease with extension of shaft

Example:
2.5-MSJ-U 6:1 / SSE-1 / **CTI-2** / FT / 24.5 / S

CTI = Counter increasing with extension of lift shaft
2 = Position 2

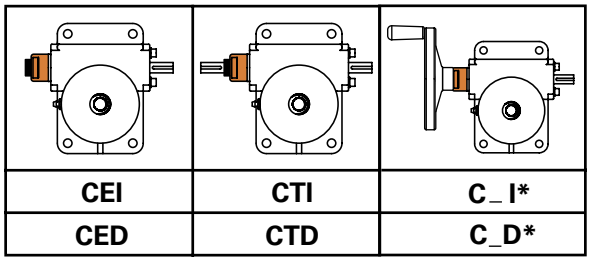

CEI	CTI	C_I*
CED	CTD	C_D*

Counter Configurations

Product Code	Increase / decrease with extension of travel	Shaft extension
CEI	increase	without shaft extension
CED	decrease	without shaft extension
CTI	increase	with worm shaft extension
CTD	decrease	with worm shaft extension
CAI	increase	with 4" handwheel*
CAD	decrease	with 4" handwheel*
CBI	increase	with 6" handwheel*
CBD	decrease	with 6" handwheel*
CCI	increase	with 8" handwheel*
CCD	decrease	with 8" handwheel*
CDI	increase	with 10" handwheel*
CDD	decrease	with 10" handwheel*

*See handwheel page 122 to select the correct size for jack model

Counter Positions

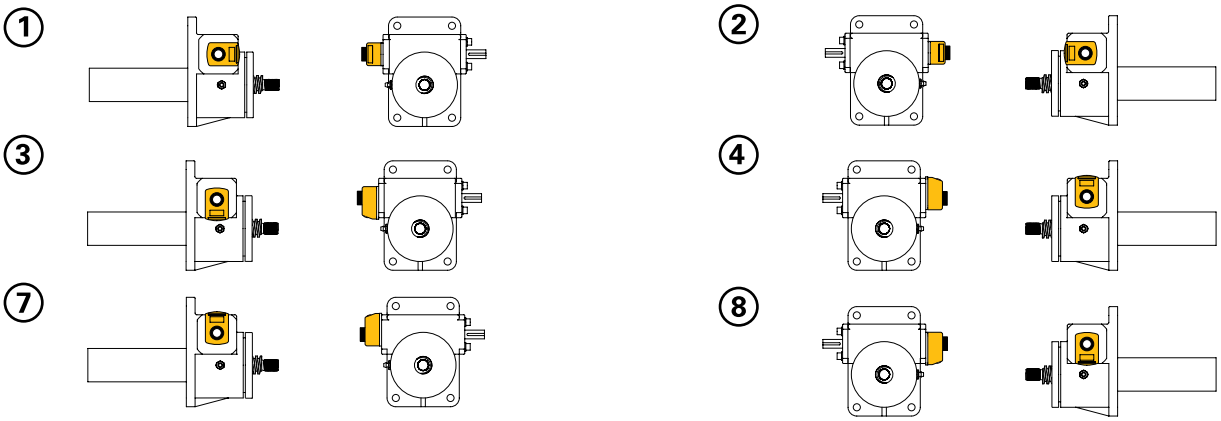

Accessories - Environmental Jack Options

Thomson offers serval options for demanding applications. Please contact Thomson for special requests.

How to Order Environmental Jacks

Example:
2.5-MSJ-U 6:1/SSE-1/SSE-2/FT/24/ **IWH** S

IHW = Indoor - wet/harsh
IHF = Indoor - wet/food grade
OUT = Outdoor
MAR = Marine
HTX = High temp
LTX = Low temp

Indoor - Wet/Harsh Environment (IHW)

For basic wash down with harsh cleaning chemicals.
Changes include:

- Stainless steel fasteners and hardware
- Fluorocarbon (Viton) seals
- Corrosion-resistant motor adapters and reducers
- Corrosion-resistant limit switches
- Hypalon-coated nylon boot
- Self-priming epoxy paint

Indoor - Wet/Food Grade Environment (IHF)

For food processing applications.
Changes include:

- Stainless steel fasteners and hardware
- Fluorocarbon (Viton) seals
- Corrosion-resistant motor adapters and reducers
- Corrosion-resistant limit switches
- Hypalon-coated nylon boot
- Self-priming epoxy paint
- Food-grade grease

Outdoor (OUT)

For basic outdoor and weather environments.
Changes include:

- Stainless steel fasteners and hardware
- Fluorocarbon (Viton) seals
- Corrosion-resistant motor adapters and reducers
- Corrosion-resistant limit switches
- Hypalon-coated nylon boot
- Self-priming epoxy paint as primer
- Polyurethane outdoor coating for topcoat

Marine (MAR)

For salt air outdoor and weather environments.
Changes include:

- Stainless steel fasteners and hardware
- Fluorocarbon (Viton) seals
- Corrosion-resistant motor adapters and reducers
- Corrosion-resistant limit switches
- Hypalon-coated nylon boot
- Marine duty paint

High-Temp (HTX)

For indoor, high-ambient temperature (180°F to 300°F) environments.
Changes include:

- High temperature grease
- Fluorocarbon (Viton) seals
- Silicone-coated fiberglass boot (max 550°F).
- High temperature paint

Note: High-temp jacks do not accommodate motor mounts, limit switches or some RAD gearbox ratios.

Low-Temp (LTX)

For outdoor, low-ambient temperature (-40°F to 0°F) environments.
Changes include:

- Stainless steel fasteners and hardware
- Low temperature grease
- Fluorocarbon (Viton) seals
- Hypalon-coated nylon boot
- Self-priming epoxy paint as primer
- Polyurethane outdoor coating for topcoat

Note: Low-temp jacks do not accommodate limit switches or some RAD gearbox ratios.

Accessories - Trunnion Adapters

Thomson ActionJac™ trunnion adapter plates allow for easy installation in applications where the jack moves through an arc during operation. These jacks are typically configured with motor mounts or right-angle reducers. Trunnion adapter plates bolt to the jack flange and have precision bores for trunnion pins.

Design Information

The trunnion pins should be supported to within 1/16 inch of the trunnion adapter plate. See the "A" dimension in the table for the width of the mounting plate. The maximum distance between the trunnion pin support mounting surfaces should be less than or equal to the "A" dimension plus 0.13 inches. The trunnion pins should be ground to the "D" diameters shown in the table. The trunnion pins should be made from steel with a hardness greater than 30 HRC and a yield strength greater than 60,000 psi.

Trunnion Adapters

Jack model	Trunnion part no.	A	B	C	D	E	F	G
2.5-MSJ	TA-0025	6.50	3.88	1.25	0.7491 - 0.7479	1.25	0.13	1.750
5-MSJ	TA-0050	8.25	5.75	1.50	0.9991 - 0.9979	1.50	0.13	2.188
10-MSJ	TA-0100	9.00	7.25	2.00	1.2488 - 1.2472	1.50	0.13	2.600
20-MSJ	TA-0200	11.25	8.00	2.25	1.4988 - 1.4972	1.75	0.13	2.875
2.5-BSJ	TA-0025	6.50	3.88	1.25	0.7491 - 0.7479	1.25	0.13	1.750
5-BSJ	TA-0050	8.25	5.75	1.50	0.9991 - 0.9979	1.50	0.13	2.188
10-BSJ	TA-0100	9.00	7.00	2.00	1.2488 - 1.2472	1.38	0.13	2.600
20-BSJ	TA-0200	11.25	8.00	2.25	1.4988 - 1.4972	1.75	0.13	2.875

Accessories - Trunnion Adapters

BSJ and MSJ Trunnion Bottom View

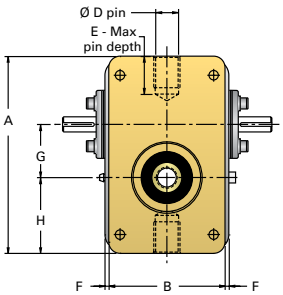

BSJ-U
(Ball Screw Upright)

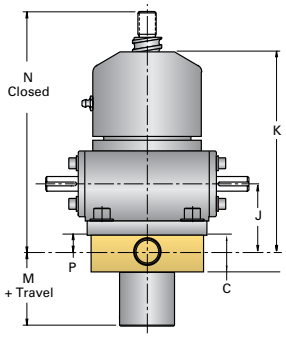

BSJ-I
(Ball Screw Inverted)

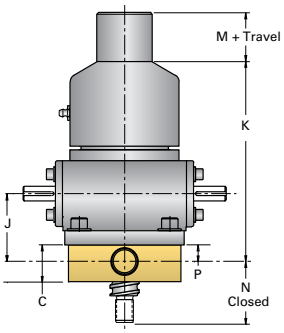

BSJ-UR and MSJ-UR
(Ball and Machine Screw Upright Rotating)

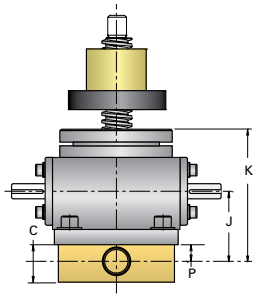

BSJ-IR and MSJ-IR
(Ball and Machine Screw Inverted Rotating)

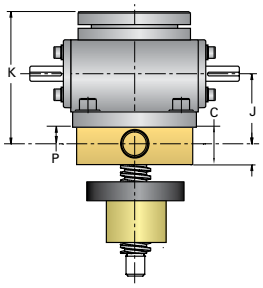

MSJ-U
(Machine Screw Upright)

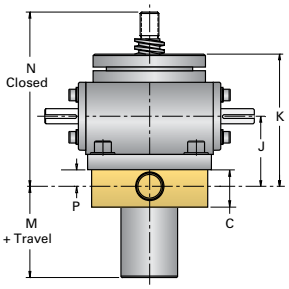

MSJ-I
(Machine Screw Inverted)

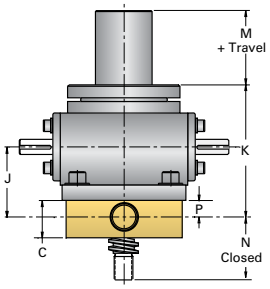

			Upricght			Inverted			Upright rotating	Inverted rotating
H	J	P	K	M	N	K	M	N	K	K
2.50	2.32	0.56	4.38	1.38	5.75	4.38	0.69	2.06	4.38	4.38
3.13	2.94	0.69	5.44	1.44	7.69	5.44	0.63	3.06	5.44	5.44
3.00	3.13	0.88	5.75	1.75	7.75	5.75	0.63	3.12	5.75	5.75
4.25	4.25	1.00	7.75	1.84	10.25	7.75	0.63	3.75	7.75	7.75
2.50	2.32	0.56	6.81	2.31	8.19	6.81	1.63	2.06	4.38	4.38
3.13	2.94	0.69	10.00	2.31	11.88	10.00	1.75	3.06	5.44	5.44
3.00	3.13	0.88	10.00	2.75	12.25	10.00	1.63	3.37	5.75	5.75
4.25	4.25	1.00	15.75	3.63	18.25	15.70	2.38	3.75	7.75	7.75

Accessories - Handwheels

A handwheel is a convenient solution for manually operating a jack when using machine screw jacks in intermittent positioning applications. Handwheels are available in a range of diameters from 4 to 10 inches and can be adapted for use on jacks from the Mini Jacks up to the 20-ton capacity model.

Note: Handwheels do not include a brake and therefore are not for use with ball screw jacks. When using handwheels with a jack that can backdrive (12:1 and lower), an additional locking mechanism may be required to prevent "creep."

How to Order a Jack with a Handwheel

Example

2.5-MSJ-U 24:1 / **H064-1** / SSE-2 / FT / 12.0 / S

H064 = Product code from tabel below.

1 = Mounting position

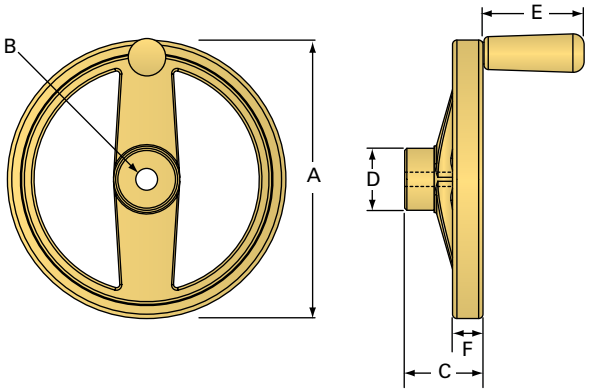

Handwheels

Jack size	A	B	C	D	E	F	Product code
MJ	4	0.375	1.50	1.19	1.62	0.62	H043
1-MSJ	4	0.500	1.50	1.19	1.62	0.62	H044
	6	0.500	2.00	1.56	2.56	0.75	H064
2-MSJ	4	0.500	1.50	1.19	1.62	0.62	H044
	6	0.500	2.00	1.56	2.56	0.75	H064
2.5-MSJ	4	0.500	1.50	1.19	1.62	0.62	H044
	6	0.500	2.00	1.56	2.56	0.75	H064
5-MSJ	6	0.750	2.00	1.56	2.56	0.75	H066
	8	0.750	2.25	1.78	2.94	0.88	H086
	10	0.750	3.00	2.25	3.94	1.00	H106
10-MSJ	8	1.000	2.25	1.78	2.94	0.88	H088
	10	1.000	3.00	2.25	3.94	1.00	H108
15-MSJ	8	1.000	2.25	1.78	2.94	0.88	H088
	10	1.000	3.00	2.25	3.94	1.00	H108
20-MSJ	8	1.000	2.25	1.78	2.94	0.88	H088
	10	1.000	3.00	2.25	3.94	1.00	H108

Accessories - Bellows Boots

Bellows boots are available for all sizes and configurations of ActionJac™ worm gear screw jacks. A boot protects the lifting shaft from contamination and helps retain lubricant to ensure long jack life. Standard boots are sewn from black neoprene-covered nylon fabric for oil, water and weather resistance, and are acceptable for use in -30° to +300°F environments. Alternate materials for more demanding environments are available upon request.

Guides are recommended for all horizontal applications where travel exceeds 24 in or if the boot needs to remain centered around the screw. The recommended number of guides is one for every 24 in of travel length.

Bellows boots can increase the closed height of the jack when it is in the fully retracted position. The increase in closed height varies with travel length and style of jack. If this or any other boot dimension is critical, contact Thomson Application Engineering for assistance.

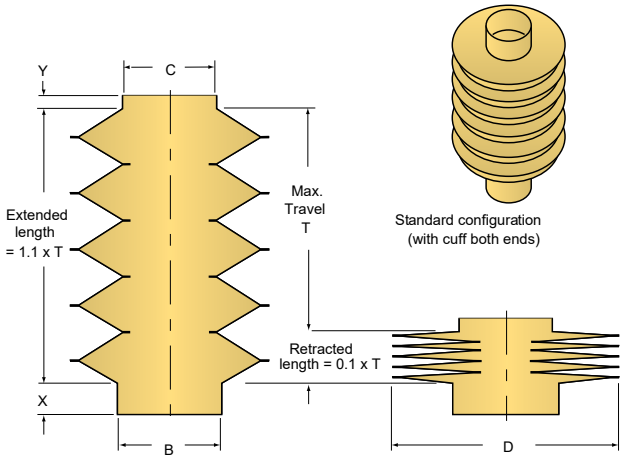

How to Order Boots

Example:
5-MSJ-U 6:1 / SSE-1 / SSE-2 / FT / 36.0 / **BG**S

B = Boot
G = With optional guide

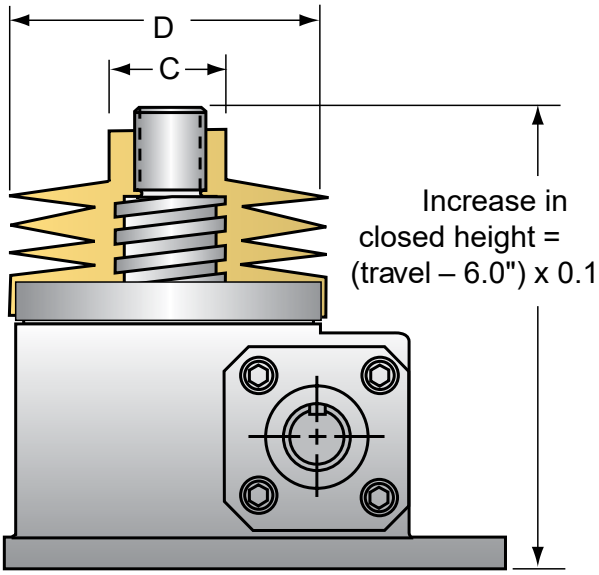

Boot Dimensions

Jack model		D diameter (in)	Max. screw diameter (ref.) (in)
Ball screw	Machine screw		
0.5-BSJ	All MJ	4.00*	0.63
1-BSJ	1-MSJ	4.25	0.75
2, 2.5, 3-BSJ	2, 2.5-MSJ	4.50	1.16
5, 10-BSJ	5-MSJ	5.00	1.50
—	10-MSJ	5.50	2.00
—	15-MSJ	5.75	2.25
20-BSJ	20-MSJ	6.00	2.50
30-BSJ	30-MSJ	7.50	3.38
—	35-MSJ	8.00	3.75
50,75, 100-BSJ	—	9.00	4.00
—	50-MSJ	9.50	4.50
—	75-MSJ	10.00	5.00

Accessories - Radial Support Bearings

Many applications require longer lift shafts or jacks that are connected together with a common shaft that is a significant distance apart. Resonance frequency can cause the lift shaft or link shaft to oscillate and whip, shortening the life of the lift shaft or dislodge the link shafting from its coupling. Radial support bearings are used to provide radial support for the lift shaft on rotating-style screw jacks, as well as the link shafting products. By adding radial support bearings, you can increase the effective speed of the lift shaft or link shafting. There are two styles of radial support bearings: flange mount and base mount. The flange mount allows for perpendicular mounting with respect to the axis of rotation. The base mount allows for in-line mounting with respect to the axis or rotation.

Flange Mount

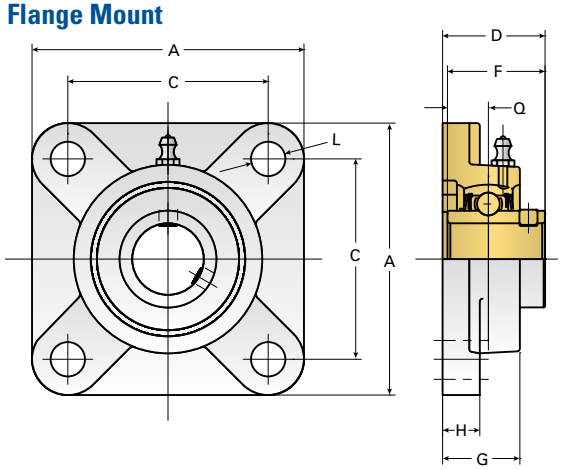

Base Mount

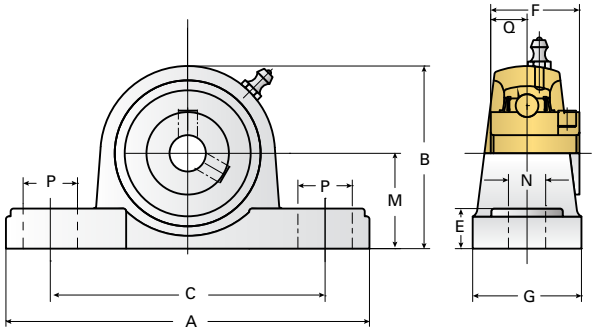

Radial Support Bearings Selection Table

Base mount	Flange mount	BSJ	MSJ	SS-MSJ	Bevel	Link shaft
EZCP201-8	EZCF201-8	1/1HL-BSJ	1-MSJ			LJ/LJK-8
EZCP202-10	EZCF202-10		2/2R/2.5-MSJ	2SS-MSJ		
EZCP204	EZCF204	2.5/2.5HL-BSJ			G1	
EZCP204-12	EZCF204-12	2/2R/3-BSJ				LJ/LJK-12
EZCP205	EZCF205	5/5HL/10/10HL-BSJ			G2	
EZCP205-16	EZCF205-16		5-MSJ	5SS-MSJ		LJ/LJK-16
EZCP206	EZCF206					
EZCP206-20	EZCF206-20		10-MSJ	10SS-MSJ		
EZCP208	EZCF208					
EZCP208-24	EZCF208-24		15-MSJ			LJ/LJK-24
EZCP209	EZCF209	20/20HL-BSJ			G3	
EZCP209-28	EZCF209-28		20-MSJ	20SS-MSJ		
EZCP210	EZCF210					
EZCP212	EZCF212	30/30HL-BSJ				
EZCP213-40	EZCF213-40		30-MSJ			
EZCP215-48	EZCF215-48		35-MSJ			

Accessories - Radial Support Bearings

Base Mount Radial Support Bearings

Item#	Diameter	A	B	C	E	F	G	M	N	P	Q
EZCP201-8	0.50 in	127	65	95	15	31	38	33.3	13	19	12.7
EZCP202-10	0.625 in	127	65	95	15	31	38	33.3	13	19	12.7
EZCP204	20 mm	127	65	95	15	31	38	33.3	13	19	12.7
EZCP204-12	0.75 in	127	65	95	15	31	38	33.3	13	19	12.7
EZCP205	25 mm	140	70	105	16	34	38	36.6	13	19	14.3
EZCP205-16	1.00 in	140	70	105	16	34	38	36.6	13	19	14.3
EZCP206	30 mm	165	83	121	18	38.1	48	42.9	17	21	15.9
EZCP206-20	1.25 in	165	83	121	18	38.1	48	42.9	17	21	15.9
EZCP208	40 mm	184	100	137	19	49.2	54	49.2	17	21	19
EZCP208-24	1.50 in	184	100	137	19	49.2	54	49.2	17	21	19
EZCP209	45 mm	54	108	146	20	49.2	54	54	17	21	19
EZCP209-28	1.75 in	54	108	146	20	49.2	54	54	17	21	19
EZCP210	50 mm	206	114	159	22	51.6	60	57.2	20	25	19
EZCP212	60 mm	241	138	184	25	65.1	70	69.8	20	25	25.4
EZCP213-40	2.50 in	265	150	203	27	65.1	70	76.2	25	30	25.4
EZCP215-48	3.00 in	275	163	217	28	77.8	74	82.6	25	30	33.3

Flange Mount Radial Support Bearings

Part. No	Diameter	A	C	D	F	G	H	L	Q
EZCF201-8	0.50 in	86	64	33.3	31.0	25.4	11	12	12.70
EZCF202-10	0.625 in	86	64	33.3	31.0	25.4	11	12	12.70
EZCF204	20 mm	86	64	33.3	31.0	25.4	11	12	12.70
EZCF204-12	0.75 in	86	64	33.3	31.0	25.4	11	12	12.70
EZCF205	2 5 mm	95	70	35.7	34.0	27.0	13	12	14.36
EZCF205-16	1.00 in	95	70	35.7	34.0	27.0	13	12	14.30
EZCF206	30 mm	108	83	40.2	38.1	31.0	13	12	15.90
EZCF206-20	1.25 in	108	83	40.2	38.1	31.0	13	12	15.90
EZCF208	40 mm	130	102	51.2	49.2	36.0	15	16	19.00
EZCF208-24	1.50 in	130	102	51.2	49.2	36.0	15	16	19.00
EZCF209	45 mm	137	105	52.2	49.2	38.0	16	16	19.00
EZCF209-28	1.75 in	137	105	52.2	49.2	38.0	16	16	19.00
EZCF210	50 mm	143	111	564.6	51.6	40.0	16	16	19.00
EZCF212	60 mm	175	143	68.7	65.1	48.0	18	19	25.40
EZCF213-40	2.50 in	187	149	69.7	65.1	50.0	22	19	25.40
EZCF215-48	3.00 in	200	159	78.5	77.8	56.0	22	19	33.30

Accessories - Lubricants

ActionJac™ worm gear screw jacks require lubrication to operate efficiently and to maximum life. Standard lubrication is NLGI #2 grease. Lubricants are available for both high and low temperatures.The jack gear boxes are shipped pre-greased unless otherwise specified. Before operating any unit, verify lubricant presence. All jack housings are furnished with a grease fitting and pipe plug. Lubrication inspection is recommended at regular intervals. Once every six months is satisfactory under normal operating conditions, unless experience indicates that regreasing should occur at shorter or longer intervals. Several operating conditions will shorten the lubrication inspection interval. Lubricants containing additives such as molydisulfide or graphite should not be used. Ball screw models need only a light film of lubricant on the lift shaft for most applications. Thomson E-900 ball screw lubricant may be applied with a cloth or spray. Operating a ball screw jack lift shaft without lubrication will result in a 90% reduction in life.

Lubrication intervals for the lift shaft of machine screw models are determined by the application. Proper lubrication with E-100 spray lube or PAG-1 grease must be provided to achieve satisfactory service life. It is required that screw assemblies are lubricated often enough to maintain a film of lubricant on the screw.

Jack Gearbox Lubricant

Lubricant	Usage	NLGI grade number	Gelling agent	Temp. range	Net contents / unit	P/N.	Net weight
GBL - 400	Standard applications	2	Lithium	20 to 280°F	1 tube	NLU-3001	14.1 oz
					Case of 10	NLU-6001	—
GBL - 800	High temp applications	1.5	Clay	-50 to 350°F	1 tube	NLU-3005	12.5 oz
					Case of 10	NLU-6005	—

Machine Screw Jack Lift Shaft Lubricant

Lubricant	Usage	NLGI grade number	Gelling agent	Temp. range	Net contents / unit	P/N.	Net weight
PAG-1 grease	Acme screws and nuts	2	Calcium	15 to 400°F	1	NLU-1001	16 oz
					Case of 12	NLU-2001	—
E-100 spray	Acme screws and nuts	2	Calcium	15 to 400°F	1	NLU-1002	12 oz
					Case of 12	NLU-2002	—

Ball Screw Jack Lift Shaft Lubricant

Lubricant	Usage	NLGI grade number	Gelling agent	Temp. range	Net contents / unit	P/N.	Net weight
E-900 spray	Ball screws and nuts	N/A	N/A	-65 to 350°F	1	NLU-1003	12 oz
					Case of 12	NLU-2003	—
E-900L oil	Ball screws and nuts	N/A	N/A	-65 to 350°F	1	NLU-1004	32 oz
					Case of 12	NLU-2004	—

Accessories - Paints

To maximize life of any Thomson products, considering material and paint options is critical. Many of our products can be offered in anti-corrosion material such as 304 stainless alloys. In addition, Thomson provides several paint options for a variety of environmental applications.

Paint Options

Paint	Part number	Environment conditions	Dry time	Cure time	Paint type	Color
Standard paint	-	Interior, non-humid, clean conditions free from contamination	1 hr.	n/a	Quick dry enamel	red/blue/white
Premium paint – interior	P-5100-61	Interior, light humidity, heavy contamination, dust	2 days	7 days	Sherwin- Williams Macropoxy 646	white
Premium paint – outdoor	P-5100-72	Exterior, all weather, UV, heavy contamination, dust	2 days	7days	Sherwin- Williams Acrdon 7300	white
Premium paint – marine	P-5100-75	Exterior, saltwater humidity, all weather, UV, heavy contamination, dust	2 days	7 days	Sherwin- Williams Sher-Loxane 800	white

Spray Cans

ActionJac worm gear screw jacks are painted with a unique enamel color blend that is specific to Thomson. Thomson can provide alternative colors and epoxy paints upon request, including mil spec paints. Thomson paints are available in 9 oz. aerosol cans in three different colors:

Blue P-5100-25
Red P-5100-26
White P-5100-27

Technical Information

Travel Length
Each jack is made to order based on travel length, and the maximum travel length is only limited by the availability of raw materials.

Travel vs. Input Revolutions
The number of turns of the worm required to move one inch is a function of the worm gear ratio and the lead of the screw. The charts at the front of each section give the number of "turns of worm for one inch raise" for each jack. The motor rpm divided by this number is the linear speed of the jack lift shaft or travel nut. Conversely, the desired travel rate multiplied by the "turns of worm for 1 inch raise" equals the input rpm required.

Lead Accuracy
Lead accuracy is the difference between the actual distance traveled versus the theoretical distance traveled based on lead. For example: A screw with a 0.5 inch lead and ±0.004 in/ft lead accuracy rotated 24 times theoretically moves the nut 12 inches. But with a lead accuracy of ±0.004 in/ft, actual travel could be from 11.996 to 12.004 in. The rolled thread ball screw, as employed in ActionJac™ products, is held within ±0.004 in/ft lead error. The rolled acme thread screws used in our machine screw jacks have a typical lead accuracy of ±0.004 in/ft.

Input Torque
The input torque is the rotary force required at the input of the jack to generate an output force at the lift shaft. The product specification pages show the torque necessary to raise one pound. This number multiplied by the load is the required input torque. Due to static friction, starting or "breakaway" torque can be as much as two to three times running torque. If the load is moved horizontally, the force required to move the load will be lessened in proportion to the coefficient of friction of the surface along which the load is moved. In addition, the force needed to start, stop and hold the load (inertia loading) is provided by the jack. Jack sizing should consider all these forces. If an application calls for several jacks to be driven together in series, the first jack should be limited to three times the rated maximum input torque, as listed in the jack selection chart for the particular selected jack.

Tare Drag Torque
The gear box components (bearings, seals and grease) in a jack add "tare drag". The product specification pages show the tare drag torque. When loading ActionJac worm gear screw jacks with loads less than 25% of their rated capacity, tare drag torque needs to be added to the torque requirement.

Input Speed
ActionJac worm gear screw jacks are rated for up to 3,000 rpm input speed, provided horsepower and temperature ratings are not exceeded.

Self-Locking and Brakes
Machine screw jacks having gear ratios between 20:1 and 32:1 can be considered self-locking. However, vibration, wear, temperature or lubrication characteristics may cause any worm screw jack to backdrive and should be considered. All other ratios will require a brake to prevent backdriving. All ball screw jacks can backdrive and require some means of holding the load, such as a brake on the motor. The product specification pages show holding torque values. In addition to backdriving, system inertia usually results in some over travel when the motor is switched off. The inertia of the system should be considered when determining the brake size required to stop a dynamic load.

Temperature
All ActionJac worm gear screw jacks are suitable for operation within the specified limits provided that the housing temperature is not lower than -20°F or higher than +200°F. Factory supplied grease in standard units will operate in this range. For higher or lower operating temperature ranges, contact Thomson. Housing temperature should be monitored and kept below 200°F. Continuous or higher duty cycle operation is possible by de-rating the jack capacity, external cooling of the unit or through the use of a recirculating lubrication system.

Travel Stops
Travel stops are not standard. A limit switch and a brake should be used to stop the motor. Mechanical stops can cause damage to the jacks because most electric motors will deliver stall torques much higher than their rated torques and motor

Technical Information

inertia can cause severe shock loads. For hand operation, mechanical stops can be provided.

Ball Screw vs. Machine Screw Jack

The decision to use a ball screw jack or a machine screw jack is based on the application. For many applications, a ball screw model is the best choice. Ball screw jacks are more efficient and therefore require less power than a machine screw jack. For low duty cycle and hand-operated applications, or if backdriving is not acceptable, consider a machine screw jack.

Ball screw jacks are preferred for:

- Long travel lengths
- Long, predictable life
- High duty cycles
- Oscillating motion

Machine screw jacks are preferred for:

- Resistance to backdriving
- Vibration environments
- Manual operation
- High static loads

Jack Sizing Considerations

Jacks are limited by multiple constraints: load capacity, duty cycle, horsepower, column strength, critical speed, type of guidance, brake motor size and screw life.

Load Capacity

All anticipated loads should be within the rated capacity of the jack. Loads on the jack in most applications include static, dynamic and moving loads, and inertia loads from acceleration and deceleration. Also consider reaction forces received from the load such as drilling or cutting forces when using a jack to move a machine tool. For shock loads, the peak load must not exceed the rated capacity of the jack, and an appropriate design factor should be applied that is commensurate with the severity of the shock. For accidental overloads not anticipated in the design of the system, jacks can sustain the following overload conditions without damage: 10% for dynamic loads, 30% for static loads.

Multiple Jack Systems

In multiple jack systems, load distribution should be considered. System stiffness, center of gravity, drive shaft windup and lead variation in the lift shafts may result in unequal load distribution. Jacks of varying capacity with equal "turns of worm for 1 in travel" may be used to accommodate unequal loading. The number of jacks to use depends on physical size and design of the equipment. Stiffness of the equipment structure and guide system will determine the appropriate number of jacks required. Fewer jacks are easier to drive, align and synchronize.

Gearbox Efficiency

The gearbox efficency is as follows:
5:1 - 10 2/3:1= 60% to 65%
20:1 - 32:1 = 45% to 50%

Duty Cycle

The cycle time is the total time the jack is operating in one complete cycle, while the duty cycle is the percentage of time on versus total time. Verify the duty cycle for the selected jack. Recommended duty cycles at max horsepower are:
Ball screw jacks = 35% (65% time off)
Machine screw jacks = 25% (75% time off)

Duty cycle is based on standard ambient temperature with 1 minute on / 2 minute off cycles. The ability of the jack to dissipate the heat that builds during operation determines duty cycle. Anything that reduces the amount of heat generated or increases heat dissipation will allow higher duty cycles. Jacks may be limited by maximum temperature (200°F) and not duty cycle.

Horsepower Ratings

Maximum horsepower ratings are based on intermittent operation. Horsepower is calculated by using the following formula:

Horsepower per jack = (torque to raise one pound × number of pounds to be raised × input rpm) / 63,025

The product specification pages show the "torque to raise one pound" value for each jack. Add tare drag torque if operating under 25% rated load. Horsepower values are influenced by many application-specific variables including mounting, environment, duty cycle and lubrication. The best way to determine whether performance is within horsepower limits

is to measure the jack temperature. The temperature of the housing near the worm must not exceed 200°F. For multiple jack arrangements, total horsepower required depends on horsepower per jack, number of jacks, the efficiency of the gear box(es) and the efficiency of the arrangement.

Arrangement efficiency:
Two jacks = 95%
Three jacks = 90%
Four jacks = 85%
Six to eight jacks = 80%
The efficiency of each miter gearbox is 90%.

The motor horsepower requirement for a screw jack arrangement (HPa) is:

HPa = HP per jack × number of jacks / arrangement efficiency × (gearbox efficiency)^N

N = number of gearboxes

Do not exceed the maximum allowable input horsepower for a jack. Many models cannot lift the fully rated load at 1,800 rpm. If the horsepower required exceeds the maximum value for the jack selected, several solutions are possible.

- Use a larger jack model to increase the maximum allowable horsepower.
- Use a ball screw jack to reduce the power required to do the same work.
- Operate at a lower input speed.
- Use a right-angle reducer to bring the power requirement within acceptable limits.

When utilizing multiple jack arrangements, the input torque to the first jack must be considered. It is recommended that the number of jacks driven through a single jack input be limited to a maximum of three jacks. Consult Thomson for arrangements where more than three jacks will be driven through a single jack input.

Column Strength

Column strength is the ability of the lift shaft to hold compressive loads without buckling. With longer screw lengths, column strength can be substantially lower than nominal jack capacity. If the lift shaft is in tension only, the screw jack travel is limited by the available screw material or by the critical speed of the screw. Refer to the acme screw and ball screw technical sections for critical speed limitations. If there is any possibility for the lift shaft to go into compression, the application should be sized for sufficient column strength. Charts are provided in each section to determine the required jack size in applications where the lift shaft is loaded in compression. To use the charts on pages 18, 54 and 84, find a point at which the maximum length "L" intersects the maximum load. Be sure the jack selected is above and to the right of that point. Maximum length includes travel length, housing length, starting/stopping distance, extra length for boots and length to accommodate attachment of the load.
If column strength is exceeded for the jack selected, consider the following options:

- Change the jack configuration to put the lift shaft in tension.
- Increase size of jack.
- Add a bearing mount (like the EZZE-MOUNT™) for rotating jacks.
- Change the lift shaft mounting condition (e.g. from clevis to top plate).

Note: Chart does not include a design factor and assume proper jack alignment with no bending loads on the screw. Effects from side loading are not included in this chart. Jacks operating horizontally with long lift shafts can experience bending from the weight of the screw.

Critical Speed

The critical speed will vary with the diameter, unsupported length, end fixity and rpm of the screw. Since critical speed can also be affected by the shaft straightness and assembly alignment, it is recommended that the maximum speed be limited to 80% of the calculated critical speed. Because of the nature of most screw jack applications, critical speed is often overlooked. However, with longer travels, critical speed should be a major factor in determining the appropriate size jack. Refer to Thomson Precision Screw Assemblies Design Guide to best determine the appropriate critical speed for a particular jack selection. Establishing a travel rate allows for evaluation of critical speed and horsepower limits. Acceleration/deceleration time needs to be considered when determining maximum required travel rate.

Technical Information

Type of Guidance

Linear motion systems require both thrust and guidance. Jacks are designed to provide thrust only and do not provide sufficient guidance support. The guidance system must be designed to absorb all loads other than thrust. Thomson can provide either hardened ground round shafting or square profile rail to support and guide linear motion systems.

Brake Motor Sizing

Safety is the most important consideration. A brake motor is recommended for all ActionJac™ products where there is a possibility of injury. Only 20:1 or greater ratio machine screw jacks can be considered self-locking in the absence of vibration. The horsepower requirements determine the size of the motor. Upon selecting a brake motor, verify that the standard brake has sufficient torque to both hold and stop the load.

Note: High-lead ball screw jacks may require larger non-standard brakes to stop the load. An appropriately sized brake will ensure against excessive "drift" when stopping for both ball screw and machine screw jacks.

Ball Screw Life

A major benefit of the use of ball screw jacks is the ability to predict the theoretical life of the ball screw. Ball screw life charts are located at the beginning of each ball screw jack section (pages 16 and 17).

Finishes

Gear Box	Housing	Finish
1/2 ton, MJ, 1 ton	Aluminum	Industrial enamel paint
2 ton - 75 ton	Ductal cast iron	Industrial enamel paint
SS jacks	300 series casting	Unpainted

Per customer request, we can apply epoxy paint or MIL specification primers and paints or paint to other special requirements.

Required Application Data

- Load
- Total maximum thrust load on jacks
- Total maximum thrust load on any one jack
- Number of jacks
- Travel
- Inches
- Orientation (vertical, horizontal, arc, diagonal, etc.)
- Travel rate
- Optimal speed
- Minimal acceptable speed
- Maximum acceptable speed
- Duty cycle
- Distance per cycle
- Number of cycles per time period
- Maximum distance traveled in any year
- Life desired
- Configuration
- Tension, compression, or both
- Driven by hand, motor or other
- Translating, rotating or double clevis
- Arrangement
- Arrangement type, (H, T, U, inline)
- Arrangement dimensions (X, Y1, Y2, etc.)

Multi-Screw-Jack Application Examples

H Arrangement

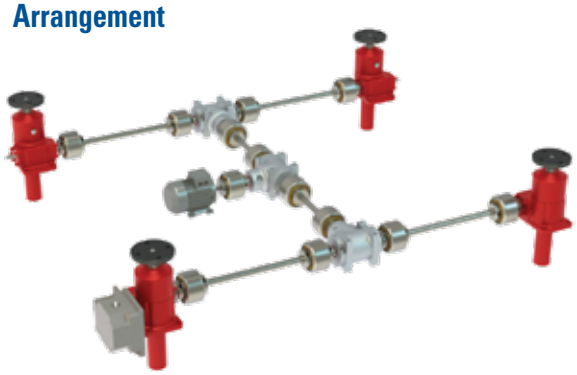

A manufacturer of steel frames is building a material lift that contains a stack of prefabricated frames. The material lift will index up as each frame is removed from the top of the stack. The jack will index up one inch in two seconds every 30 seconds. After the last frame is removed, the jacks will fully retract to the collapsed position in six seconds waiting for the next load of frames. Complete cycle time is 10 minutes running six hours per day, five days per week. The design calls for a four-jack arrangement lifting from underneath the lifting stage, driven by a single motor.

Specifications

- When fully loaded with frames, the total weight is 16,800 lbs.
- When fully extended, the total load is less than 5,000 lbs.
- The load will be in compression.
- Total travel is six inches.
- Desired design life is one year.

Analysis

Configuration: Due to frequent cycles and design life, the use of a ball screw jack would be best suited for this application. Using upright translating jacks will allow the jacks to be located under the material lift and not create any obstruction with the loading and unloading of the prefabricated frames.

Column Strength: The jacks will be fully loaded in the retracted position and be unloaded as they extend. Considering the worst case scenario with the full load at the fully extended position, the load will be 16,800 lbs lifted by four jacks, and extended to 6" of travel. When considering column strength, the 2.5-BSJ-U jack can be used.

Speed and Horsepower: The extension travel rate of 1 inches in two seconds is 30"/min. The retraction travel rate of 6 inches in six seconds equates to 60"/min. This would require using the 6:1 gear ratio when using a 1750 rpm AC motor during retraction and 720 rpm during extension. Using the horsepower formulas on page 129 and 130, the total horsepower need when fully loaded is 3.0 HP with a dual speed 1750/800 AC motor.

HP per jack = 0.0102 in-lb × 4,200 lb × 720 rpm / 63,025 = 0,489 hp/jack

HPtotal = 0.489 hp/jack × 4 jacks / 0.85 × 0.9^3 = 2.87 hp totally

Line Shafting: The longest center-to-center distance between any jack and gearbox is 36 in, leaving a shaft length of 29 in. Using the formula on page 108 based on torsional twist, the proper line shafting to use would be the LJ-12.

Nspeed = 0.6192 × (3.14/29 in) × 5.851 × 10^5 = 4,252 rpm

Ntwist = 42.84 in-lb × (29 in/6,250) = 0.199°

Life: Based on the indicated cycle rate, the total number of cycles over three years is 9,360. Considering the worst case scenario with the full load to the fully extended position, then unloaded for the retraction, the loaded travel is just over 56,160 inches. When considering the life expectancy chart on pages 16 and 17, the 2.5-BSJ-U jack can be used.

Selection

From page 19, create part numbers for the following: four 2.5-ton ball screw jacks, inverted rotating configuration, 6:1 worm gear ratio, top plate, six inches of travel. One jack to have a two-circuit limit switch.

Jacks:	3 × 2.5-BSJ-U 6:1/SSE-1/SSE-2/FP/6/S
	1 × 2.5-BSJ-U 6:1/2CA-3C/SSE-2/FP/6/S
Gearboxes:	2 × GB210S Type E
	1 × GB210S Type D
Shafting:	4 × LJ-12 29 in OAL
	2 × LT-12 14 in OAL
Couplings:	4 × P-2200-185 (½ - ¾)
	8 × P-2200-178 (¾ - ¾)
Motor:	1 × 3 HP AC 1750/800 rpm dual speed motor

Multi-Screw-Jack Application Examples

U Arrangement

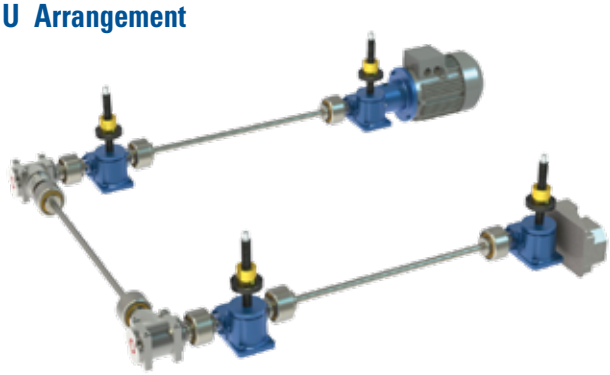

A leading cookie manufacturer is adding a new product that requires a greater distance to the top heating element of their conveyor oven. The oven originally only had a static-top heating element and with this new order, it needs to be adjustable up to 14 in. The top heating element weighs 5,000 lb. The manufacturer anticipates only making adjustments to the height once or twice a month.

Specifications

- Single motor and drive.
- Food-grade grease.
- The load will be in compression.
- Total travel is 14 in.
- The actuators and powertrain must be located outside of the oven frame.
- Travel rate is negligible as long as the total travel can be reached in less than 60 seconds.
- 2 × safety factor.

Analysis

Configuration: Due to infrequent cycles, the use of a machine screw jack would be best suited for this application. Using upright rotating jacks will allow them to be easily retrofitted to the existing oven with minimal modifications.

Column Strength: The jacks will be fully loaded in both the retracted and extended positions. Because of the retrofit condition, it is not possible to have a support bearing on the lift shaft. Using mounting condition A on the column strength chart located on page 54 and the manufacturer's safety requirements, the 10-ton jack was selected.

Speed and Horsepower: Using a standard 1750 AC motor and the 24:1 gear ratio, full travel would be reached in 36 seconds. Using the horsepower formulas on page 129 and 130, a 5 HP AC motor running at 1750 rpm will be adequate for the requirements.

HP per jack = 0.0192 in-lb × 1,250 lb × 1,750 rpm / 63,025 = 0.66 hp/jack

HPtotal = 0.66 hp/jack × 4 jacks / 0.85 × 0.9^2 = 3.83 hp totally

Line Shafting: The longest center-to-center distance between any two jacks is 79 in, leaving a shaft length of 72 in. Using the formula on page 108, based on critical speed, the proper line shafting to use would be the LJT-50

Nspeed = 0.6192 × (3.14/72 in) × 1.907 × 10^6 = 2,248 rpm

Ntwist = 96 in-lb × (29 in/25,000) = 0.28°

Selection

From page 55, create reference numbers for the following: four 10-ton machine jacks, upright rotating configuration, 24:1 worm gear ratio, 21 in "L" dimension. One jack to have a 56C motor mount and a 5 HP brake motor, and one jack to have a two-circuit limit switch.

Jacks:	2 × 10-MSJ-UR 24:1/SSE-1/SSE-2/FA/21/M
	1 × 10-MSJ-UR 24:1/SSE-1/50LT-2/FA/21/M
	1 × 10-MSJ-UR 24:1/SSE-1/2CA-8/FA/21/M
	M = Food-grade grease
Gearboxes:	1 × GB15 Type G
	1 × GB15 Type F
Shafting:	2 × LJT-50 72 in OAL
	1 × LTJ-50 36 in OAL
Couplings:	4 × P-2200-XX (1 in - 22 mm)
	2 × P-2200-177 (1in - 1in)
Motor:	1 × 5 HP AC 1750 rpm motor

Multi-Screw-Jack Application Examples

T Arrangement

A manufacturer is looking to periodically raise and lower a cylindrical mixer eight inches during the mixing cycle to allow product testing for quality and consistency. The cylinder weighs 1,700 lbs and is mounted on a movable cart, allowing for the final product to be moved to a dispensing station. The customer wants a four-times safety factor with respect to capacity.

Specifications

- Single motor and drive.
- The load will be in tension.
- Total travel is eight inches.
- Four-times safety factor.
- Eight inches in five seconds.

Analysis

Configuration: To minimize the size of the motor drive, a ball screw jack will be used. Based on the mounting frame, the inverted rotating configurations will be used.

Column Strength: The jacks will be loaded in tension, therefore column strength does not need to be considered.

Speed and Horsepower: Using a standard 1750 AC motor and the 2.5HL-BSJ with the 12:1 gear ratio, full travel would be reached in 3.5 seconds. Using the horsepower formulas on page 129 and 130, a 2 HP AC motor running at 1750 rpm will be adequate for the requirements.

HP per jack = 0.0244 in-lb × 566 lb × 1,725 rpm / 63,025 = 0.38 hp/jack

HPtotal = 0.38 hp/jack × 3 jacks / 0.9 × 0.9^2 = 1.55 hp totally

LinkJac™ Line Shafting: The longest center-to-center distance between the jack and gearbox is 24 in, leaving a shaft length of 17 in. Using the formula on page 108 based on torsional twist, the proper line shafting to use would be the LJ-8.

Nspeed = 0.6192 × (3.14/72 in) × 1.907 × 10^6 = 2,248 rpm

Ntwist = 41.48 in-lb × (17 in/1,235) = 0.57°

Selection

From page 19, create reference numbers for the following: three 2.5-ton ball screw jacks, inverted rotating configuration, 12:1 worm gear ration, 15 in "L" dimension.

Jacks:	3 × 2.5-BSJ-IR 12:1/SSE-1/SSE-2/FA/15/S
Gearboxes:	2 × GB210 Type D
Shafting:	2 × LJ-8 17 in OAL 1 × LJ-8 12 in OAL
Couplings:	3 × P-2200-XX (½ - ½) 5 × P-2200-178 (¾- ¾)
Motor:	1 × 2 HP AC 1750 rpm motor

Multi-Screw-Jack Application Examples

In-Line Arrangement

A steel tube manufacturer is developing a new OD polisher that will increase production by 22%. Because of the increased production time, the setup crew is unable to set the feed table manually and is looking to automate the feed table height using screw jack actuators. The feed table length is 24 feet and weighs 5,600 lbs with the largest-diameter steel pipe. The table height will need to change approximately once every 15 minutes, but no more than 10 times a day. Maximum height change is nine inches. The travel rate is 0.4 in/s.

Specifications

- Single motor and drive, with the possibility to remove the motor and drive by hand.
- The load will be in compression.
- Total travel is 14 in.
- 0.25 in/s.

Analysis

Configuration: Because of the possibility to be hand driven, a machine screw jack with 24:1 gear ratio is needed to prevent back-driving. Based on the mounting constraints, the upright translating jack with a clevis rod end will be used. Due to the length of the feed table, four jacks will be used in-line with a center-mounted motor through a single gearbox.

Column Strength: The jacks will be loaded in compression and in mounting condition D. Based on the load and number of jacks, the 2.5-MSJ jack or larger could be used.

Speed and Horsepower: Using a standard 1750 AC motor and the 2.5-MSJ with 12:1 gear ratio, the travel rate will be 0.6 in/s. Using the horsepower formula on page 129 and 130, the horsepower limit would be exceeded. Using the 5-MSJ 24:1 gear ratio, the travel rate will be 0.45 in/s, and the horsepower per jack will be sufficient to lift the load. A 3 HP motor would be adequate for the requirements.

HP per jack = 0.0144 in-lb × 1,400 lb × 1,725 rpm / 63,025 = 0.56 hp/jack

HPtotal = 0.56 hp/jack × 4 jacks / 0.85 × 0.9 = 2.92 hp totally

LinkJac™ Line Shafting: The longest center-to-center distance between the jack and gearbox is 48 in, leaving a shaft length of 41 in. Since the motor is located in the middle, only half the total torque is needed for calculated torsional twist. Using the formula on page 108, the proper line shafting to use would be the LJ-16.

Nspeed = 0.6192 × (3.14/41 in) × 1.1687 × 10^4 = 4,246 rpm

Ntwist = 40,32 in-lb × (41 in/19,500) = 0.09°

Selection

From page 55, create reference numbers for the following: three 2.5-ton ball jacks, upright translating configuration, 24:1 worm gear ratio, 14 in travel.

Jacks:	4 × 5-MSJ-U 24:1/SSE-1/SSE-2/FC/14/S
Gearboxes:	1 × GB210S Type D
Shafting:	2 × LJ-16 17 in OAL 1 × LJ-16 12 in OAL
Couplings:	8 × C-1805-02 (¾- 1)
Motor:	1 × 3 HP AC 1750 rpm motor

Installation and Maintenance

Installation

Alignment of the jack (or jacks) directly affects service life. Jacks must be properly aligned in all planes so that the main drive shaft can be turned without evidence of binding. The following steps are suggested but may not always be applicable when installing jacks. It is the responsibility of the end user to determine specific installation procedures. The mounting flange of the jack is a precision-machined surface. The worm shaft and lift shaft bearing bores are machined in tight relationship to the mounting flange. Better mounting surfaces will make it easier to align the jack to the load.

1. The surface(s) to which the jacks are mounted should be flat, smooth and perpendicular to the guides.
   Note: for rotating worm gear screw jacks, also ensure that the lift shaft is parallel to the guides.

2. Start with the load temporarily supported in a position closest to the jack housing(s). Locate the jack by putting it in place with the fasteners loosely assembled.

3. Level the jacks if necessary. For some applications, a piece of compliant material such as the rubber used for machine isolation bases will help compensate for potential misalignment.

4. Check the level of the load and then actuate the jacks, bringing the lift shaft or travel nut nearly in contact with the load. Adjust the position of the jacks so that their attachment points are centered on the load mounting points. Tighten the jack mounting screws. If a compliant material is installed, make sure that the fasteners do not compress the material and that there is clearance around the fasteners.

5. Rotate the worms to adjust the timing of the lift shafts as necessary to equally distribute the load. Assemble the load mounting hardware and tighten.

6. Cycle the jacks from closest to farthest point. For rotating jacks with a lift shaft bearing support, loosen the bearing support fasteners and re-tighten to ensure that the lift shaft is parallel to the guide system. Failure to do this could result in lift shaft stress fracture.

7. Cycle the jacks again and verify that no binding occurs.Check the lubrication levels, limit switch settings (note: rotary limit switches are not factory set), and tightness of all fasteners, and put the jacks in service.

Installation and Maintenance

Maintenance

ActionJac™ worm gear screw jacks require minimum maintenance. In addition to maintaining lubrication levels in the gearbox, the following items should be checked:

1. Lifting screws must be kept free of contaminants and should be lubricated. Refer to the lubrication section on page 126 for appropriate lubrications.

2. If possible, screws should be booted or returned to retracted position when not in use.

3. For machine screw jacks, lash between the lift shaft and travel nut (or drive sleeve) greater than 1⁄4 the screw pitch indicates the need for replacement of the jack lift shaft drive components.

4. For ball screw jacks, the ball screw should be checked periodically for spalling of the raceway. In normal operation, ball screw lash does not change significantly over the life of the ball screw.

5. For all jacks, check the backlash between the worm and worm gear. Lash in excess of 30° for ratios 5:1 to 8:1 and 60° for ratios 20:1 and 32:1 indicates the need to replace the worm and worm gear.

Customer Support

Nook/Thomson provides outstanding customer support with dedicated subject matter experts and a variety of online tools to simplify the design process. We collaborate with customers to put your unique designs into motion by providing engineering expertise and state-of-the-art technology.

Industry Leading Customer Support

Whether you just started researching linear motion components or need help with your installed Nook/Thomson product, our customer support team is always ready to assist you. Contact us via phone, fax or email, or visit the Thomson website to submit our contact form, live chat with an application engineer, request a quote or fill out an application data form.
www.thomsonlinear.com/cs

Online Resources

Learning more about ActionJac screw jacks is only a click away. On our website, you'll find many resources to educate you on screw jack technology, guide your purchase decision and support you following installation. Resources include 3D models in the most common CAD formats, technical videos and articles, webinar recordings, specification brochures and more.
www.thomsonlinear.com/en/products/screw-jacks

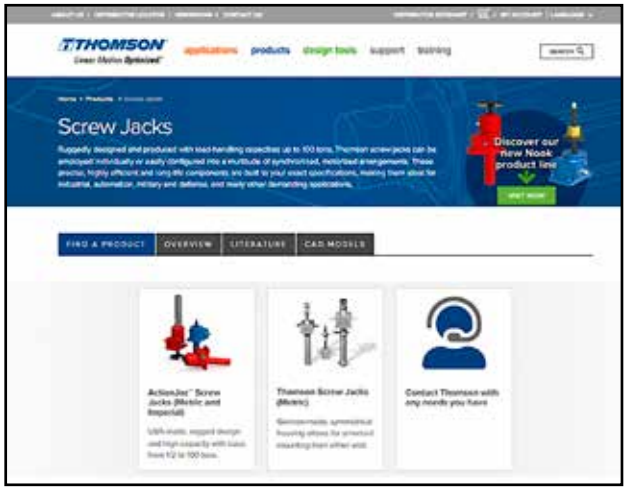

Unit Conversion Chart

Imperial to Metric		**Metric to Imperial**	
Length	Torque	Length	Torque
1 ft = 304.8 mm	1 ft-lb = 0.001356 kNm	1 mm = 0.00328 ft	1 kNm = 737.3 ft-lb
1 ft = 0.3048 m	1 ft-lb = 1.356 Nm	1 m = 3.28 ft	1 Nm = 0.737 ft-lb
1 ft = 0.0003048 km	1 ft-lb = 135.6 Ncm	1 km = 3821 ft	1 Ncm = 0.00737 ft-lb
1 in = 25400 µm	1 ft-lb = 1356 Nmm	1 m = 0.0000394 in	1 Nmm = 0.000737 ft-lb
1 in = 25.4 mm	1 ft-lb = 0.1383 kgf-m	1 mm = 0.03937 in	1 kgf-m = 7.23 ft-lb
1 in = 0.0254 m	1 in-lb = 0.000113 kNm	1 m = 39.37 in	1 kNm = 8847.2 in-lb
1 in = 0.0000254 km	1 in-lb = 0.113 Nm	1 km = 39370 in	1Nm = 8.847 ft-lb
	1 in-lb = 0.01152 kgf-m		1 kgf-m = 86.8 in-lb
Weight/Force		Weight/Force	
1 lb = 0.454 kg		1 kg = 2.205 lb	
1 lb = 0.454 kgf		1 kgf = 2.205 lb	
1 lb = 4.45 N		1 N = 0.225 lb	
1 lb = 0.00445 kN		1 kN = 224.8 lb	
Speed		Speed	
1 ft/s = 0.3048 m/s		1 m/s = 3.28 ft/s	
1 in/s = 0.0254 m/s		1 m/s = 39.37 in/s	

USA, CANADA and MEXICO
Thomson
203A West Rock Road
Radford, VA 24141, USA
Phone: 1-540-633-3549
Fax: 1-540-633-0294
E-mail: thomson@regalrexnord.com
Literature: literature.thomsonlinear.com

EUROPE
United Kingdom
Thomson
Office 9, The Barns
Caddsdown Business Park
Bideford, Devon, EX39 3BT
Phone: +44 1271 334 500
E-mail: thomson.europe@regalrexnord.com

Germany
Thomson
Nürtinger Straße 70
72649 Wolfschlugen
Phone: +49 7022 504 403
Fax: +49 7022 504 405
E-mail: thomson.europe@regalrexnord.com

France
Thomson
Phone: +33 243 50 03 30
E-mail: thomson.europe@regalrexnord.com

Italy
Thomson
Via per Cinisello 95/97
20834 Nova Milanese (MB)
Phone: +39 0362 366406
Fax: +39 0362 276790
E-mail: thomson.italy@regalrexnord.com

Sweden
Thomson
Bredbandsvägen 12
29162 Kristianstad
Phone: +46 44 590 2400
Fax: +46 44 590 2585
E-mail: thomson.europe@regalrexnord.com

ASIA
Asia Pacific
Thomson
E-mail: thomson.apac@regalrexnord.com

China
Thomson
Rm 805, Scitech Tower
22 Jianguomen Wai Street
Beijing 100004
Phone: +86 400 606 1805
Fax: +86 10 6515 0263
E-mail: thomson.china@regalrexnord.com

India
Kollmorgen – Div. of Altra Industrial Motion
India Private Limited
Unit no. 304, Pride Gateway,
Opp. D-Mart,
Baner Road, Pune, 411045
Maharashtra
Phone: +91 20 67349500
E-mail: thomson.india@regalrexnord.com

South Korea
Thomson
3033 ASEM Tower (Samsung-dong)
517 Yeongdong-daero
Gangnam-gu, Seoul, South Korea (06164)
Phone: + 82 2 6001 3223 & 3244
E-mail: thomson.korea@regalrexnord.com

SOUTH AMERICA
Brazil
Thomson
Av. João Paulo Ablas, 2970
Jardim da Glória - Cotia SP - CEP: 06711-250
Phone: +55 11 4615 6300
E-mail: thomson.brasil@regalrexnord.com

www.thomsonlinear.com

ActionJac_Screw_Jacks_CTEN-0018-02 | 20241126TJ
Specifications are subject to change without notice. It is the responsibility of the product user to determine the suitability of this product for a specific application. All trademarks property of their respective owners. © 2024 Thomson Industries, Inc.

NOOK™
A REGAL REXNORD BRAND

THOMSON®
Linear Motion. Optimized.™
A REGAL REXNORD BRAND